FINSAUNA®

PROHEAT Series Sauna Heaters

Installation & Operation Manual

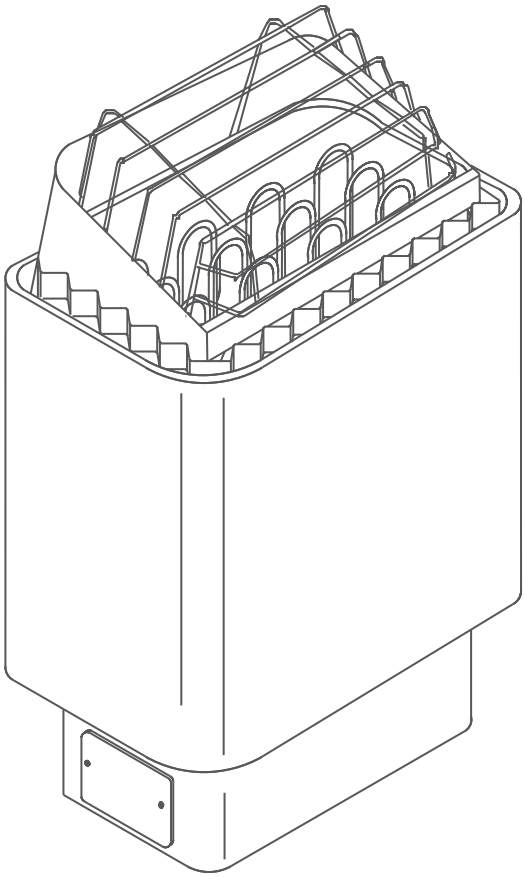

Models:

P300/KIP30W1

P450/KIP45W1

P600/KIP60W1

P800/KIP80W1

Compatible
Control Model:

SaunaLink 10

Listed 6J21
Sauna heater

IMPORTANT! This manual must be left with owner, manager, or operator of sauna after it is used by electrician!

TABLE OF CONTENTS

1. WARNINGS! 3

2. INSTALLATION OF WALL MODEL HEATER 4

2.1. Sauna Heater Wiring and Hookup 7
2.2. Sauna Control Panel Wiring and Hookup 7
2.3. Sauna Rock placement 8
2.4. Testing Sauna Heater 8
2.5. Troubleshooting 8
2.6. Caution! Electrician Or Service Person! 9
2.7. High Limit Control 9

3. ROOM CONSTRUCTION - GENERAL INFORMATION 10

3.1. Warnings! 10

4. MAINTENANCE INSTRUCTIONS 11

5. GUARANTEE 13

Finsaunausa.com
800.957.2862
finsauna@bathingbrands.com

WARNINGS!

FINSAUNA®

Do not smoke, use alcohol, or exercise in the sauna.

Do not exceed 30-minutes use in the sauna at one time, as excessive exposure can be harmful to health.

Persons with health concerns should consult their physician before using the sauna.

Avoid fire, do not place any combustible material over the sauna heater. This includes common items such as towels, bathing suits, wooden buckets, dippers, etc.

Use only clean water on the stones. Do not use pool or spa water, as chlorine gas can be produced and the heating elements can be damaged.

Keep away from the heater when it is hot. The stones and outer surface of the heater may burn your skin.

Do not pour too much water on the stones. The evaporating water is boiling hot.

Do not let young, handicapped or ill people bathe in the sauna on their own.

Consult your doctor about health-related limitations of bathing.

Parents should keep their children away from the hot heater.

Consult your pediatrician about the right age to introduce young children to the sauna environment.

Be very careful when moving in the sauna, as the platform and floors may be slippery.

Hypothermia occurs when the internal temperature of the body reaches a level several degrees above the normal body temperatures of 98.6°F (37°C). The symptoms of hypothermia include an increase in the internal temperature of the body, dizziness, lethargy, drowsiness, and fainting.

The effects of hypothermia include:
A) Failure to perceive heat
B) Failure to recognize the need to exit the room
C) Unawareness of impending hazard
D) Fetal damage in pregnant women
E) Physical inability to exit the room
F) Unconsciousness

Warning: the use of alcohol, drugs or medication is capable of greatly increasing the risk of fatal hypothermia! Pay attention and stay safe.

TYPICAL SAUNA HEATER CONTROL INSTALLATION

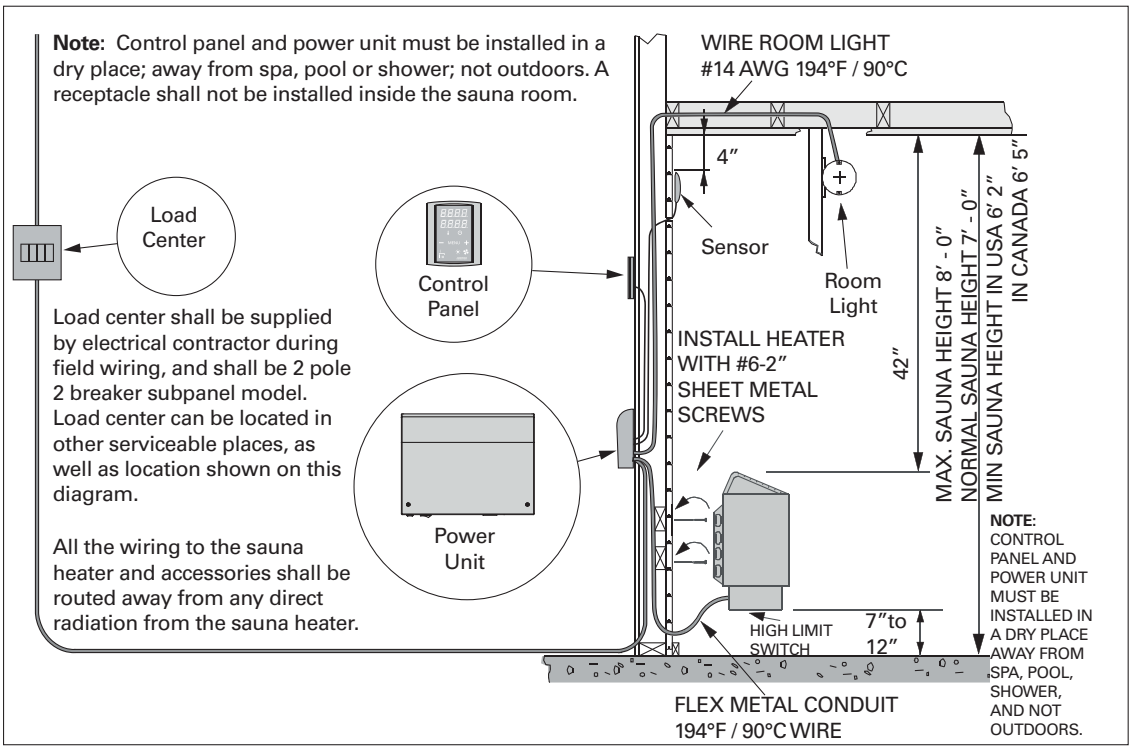

Figure 1. SaunaLink10 Digital Sauna Control

INSTALLATION OF WALL MODEL HEATER

1. Remove heater from carton and attach hater to wall with supplied screws. Use 2"x4" backing behind heater. Observe proper clearances as per page 5 and 6 and table 1.
2. See applicable wiring diagram on page 14 of the SaunaLink Precision Sauna Environment Controller. Heater must be permanently installed (no pigtails or plug allowed) and wiring must be done by a licensed electrician, who must follow wiring diagram provided and adhere to local codes. Use proper A.W.G. rated wire size and use copper wire suitable for 194°F (90°C) within sauna walls. Use grounding terminals provided in sauna heater, control system, and contactor to properly ground the equipment as per NEC and local codes.
3. Inside the heater box there are two signs. Please place the metal "CAUTION" sign on the interior wall of the sauna room directly above the heater in a visible place. Place the metal "WARNING" sign outside, on the door of the sauna room. "MAINTENANCE INSTRUCTIONS" are at the end of this manual.

THE SAUNA ROOM SHALL BE PROVIDED WITH PROPER VENTILATION. WALL-MOUNTED HEATERS-MINIMUM CLEARANCES, MIN-MAX SPACE, AND ADEQUATE VENTILATION DESCRIBED BELOW.

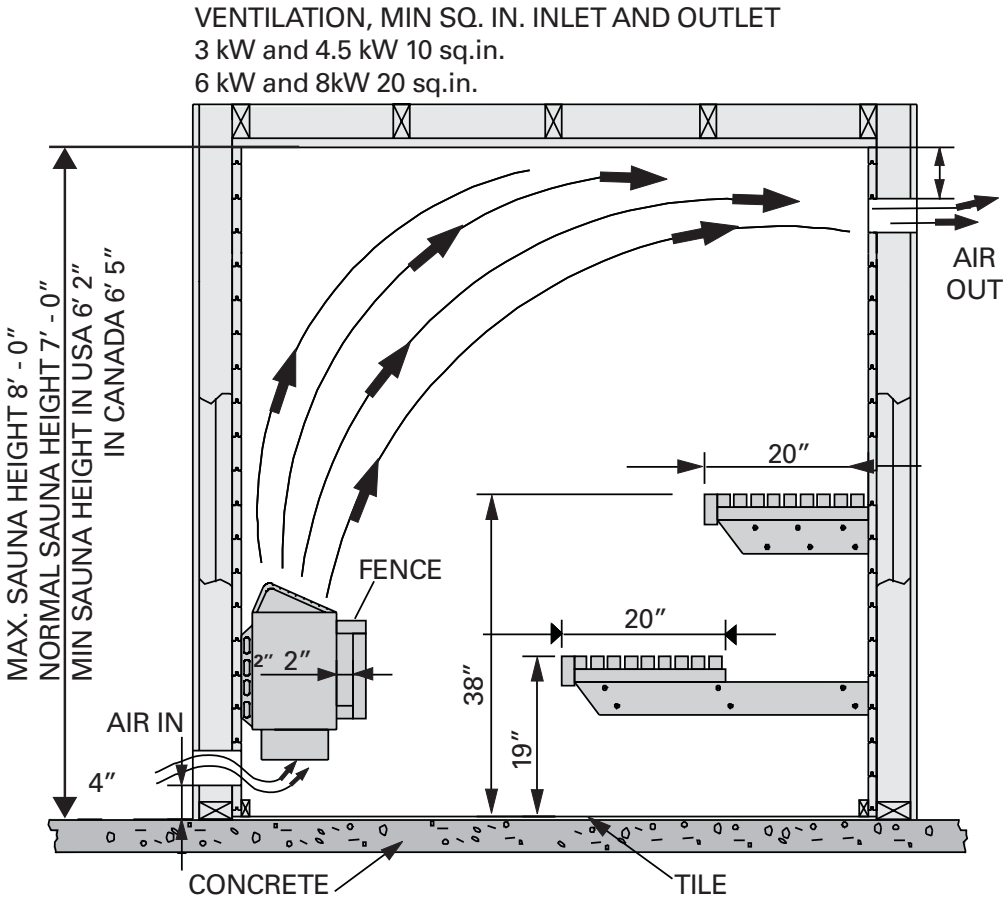

Figure 2.

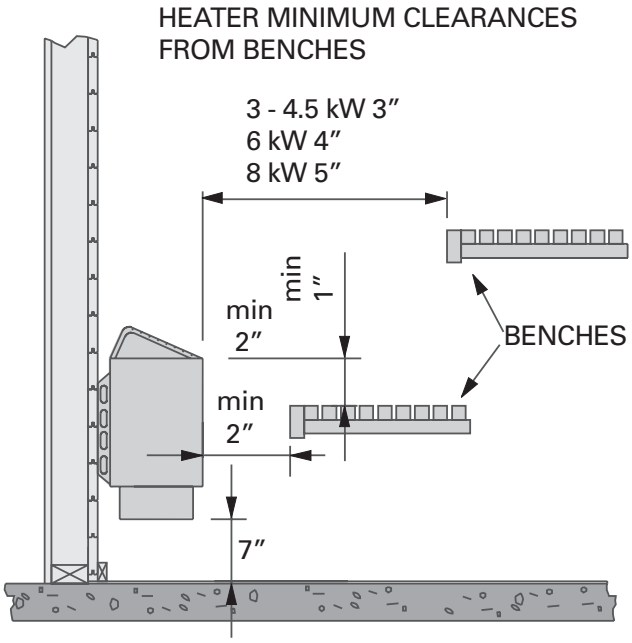

Figure 4.

HEATER MINIMUM CLEARANCES
CORNER FENCE INSTALLATION

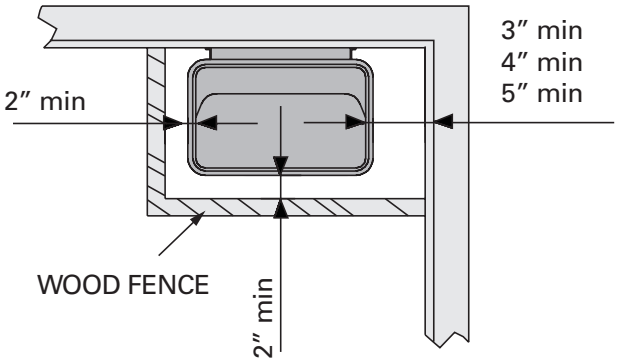

Figure 3.

HEATER MINIMUM CLEARANCES
CENTER WALL FENCE INSTALLATION

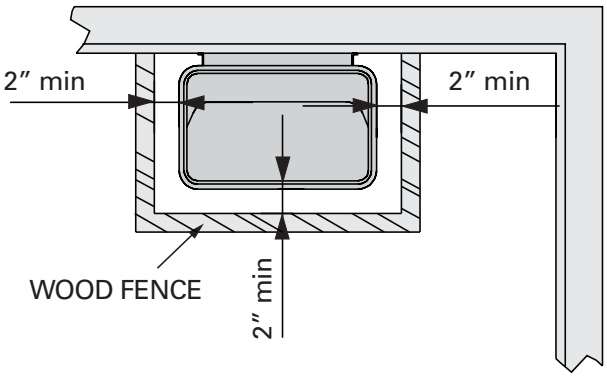

Figure 3a.

MODEL	INPUT	FLOOR AREA		SAUNA ROOM		MIN. SPACING FROM ADJACENT SURFACES (INCHES)
	KW	Min. Sq. Ft	Max. Sq. Ft	Min. Cu. Ft	Max. Cu. Ft	
P300/KIP30W1	3.0	10	20	84	130	3
P450/KIP45W1	4.5	16	30	100	210	3
P600/KIP60W1	6.0	28	40	170	300	4
P800/KIP80W1	8.0	40	65	250	425	5

Table 1

SAUNA HEATER WIRING AND HOOKUP

Refer to table below for proper wire size and amperage. See page 5 and 6 for required clearances. Any wiring within internal sauna walls must be rated 194°F (90°C) and copper wire must be used. Run wire through seal tight flex conduit from wall to heater and connect to junction box at back of heater with 194°F (90°C) connector. Connect to terminals 1 and 2 and connect ground wire to lug marked ground. (Cover plate under heater must be removed first.)

Note! If connection to heater will be made at a later time, bring flex into sauna room 4 - 6" from floor, and leave 3' of flex for hookup (can be cut to right length later).

SAUNA CONTROL PANEL WIRING AND HOOKUP

Refer to SaunaLink installation and operation manual.

SAUNA HEATER (240 V) WITH CONTROL UNIT					
Model	**kW**	**Amps**	**Voltage**	**Phase**	**Wire Size**
P300/KIP30W1	3.0	12.5	240	1	12
P450/KIP45W1	4.5	18.8	240	1	10
P600/KIP60W1	6.0	25.0	240	1	10
P800/KIP80W1	8.0	33.3	240	1	8

Models P300/KIP30W1, P450/KIP45W1, and P600/KIP60W1 require a SaunaLink10/CX170-U1-15-XW sauna heater control. Follow 240V 1Ph (single circuit) wiring on ProHeat series wiring schematic, found in the SaunaLink 10 installation and operation manual).

Model P800/KIP80W1 requires a SaunaLink10/CX170-U1-15-XW sauna heater control. Follow 240V 1Ph (single circuit) wiring on ProHeat series wiring schematic, found in the SaunaLink 10 installation and operation manual.

SAUNA ROCK PLACEMENT

Before testing heater, fill rock cavity with igneous stones provided with heater and fasten metal rock guard at top of heater.

Use only the stones which are supplied with the sauna heater. Wash stones with water hose and place inside of heater box so that rocks are between and around heating elements. However, do not force rocks between elements. Use smaller stones first, and continue to fill heater with larger stones until they are about 2" below rock guard. You may not need all of the stones.

Note! Do not operate heater without stones!

Stones should be placed loosely within heater so that there is good heat circulation around and through them. Stones should completely cover the heating elements, however! Pouring water over exposed elements could cause heater damage!

TESTING SAUNA HEATER

1. After sauna heater has been properly wired, according to appropriate wiring diagram and local codes, turn sauna breaker on in the main breaker panel. (Note! Electrician must label "sauna" breaker.)
2. Turn thermostatic (heat) control to "on" position. The indicator light will come on to show that the sauna is heating. Set timer to 10- or 15-minutes.
3. Within 5-minutes, you should be able to feel heat from heater elements when holding your hand over heater.
4. If sauna does not heat, refer to troubleshooting information.
5. It is normal for smoke to appear during the first heating, as protective element coating needs to burn off. **Turn sauna on for 1-hour before using the first time, to eliminate smoking.**

TROUBLESHOOTING

A. If sauna does not operate after initial installation and wiring:

1. Check breaker to be sure that it is on. Also, breaker should be correct size.
2. Check circuit breaker in contactor to be sure that it has not been shorted out.
3. Be sure that thermostat and timer are both in on position.

B. If sauna does not operate after initial installation and wiring:

1. Check breaker to make sure it is on.
2. Check high limit reset button in heater (reset is under the heater) to see if it has been released.
3. Call your electrician or service person for further help.

NOTE! A ground fault interrupter (GFI) should not be installed in and does not belong in a sauna. If used, the breaker will trip, and damage could result.

C. If sauna heater operates, but sauna room does not come up to sauna temperature (160-185°F, (70-85°C)) normal temperature:

1. You must allow at least 30-minutes for sauna heat-up time.
2. Is sauna thermometer located 6" from ceiling, and is it above or close to sauna heater? (This is proper location for sauna temperature reading.) Thermometer readings vary with room heights and location. Eg. 180 °F (82 °C) above sauna heater = 165 °F (74 °C) on opposite wall = 140°F (60 °C) on upper bench level = 120 °F (49 °C) on lower bench level = 100 °F (38°C) at floor level.
3. Check for proper wire size, amp size, and proper wiring (according to diagrams and information) also necessary copper wiring.
4. Check for placement of stones to make sure they are loosely spaced around elements, to ensure good air flow. Stones packed too tightly will restrict air flow and reduce heating capacity.
5. Check for heat loss around or under door or around ceiling light.
6. Is room properly insulated.
7. Is ceiling higher than 7'?
8. After checking all the above, remove rocks and check heater elements for holes or burned areas. (Only if heater has been in use for some time.)

CAUTION! ELECTRICIAN OR SERVICE PERSON!

1. Before servicing heater, control, or contactor, turn power off at breaker!
2. Open junction box to make sure wires are tightly secured with no loose connections. Heater wire and all connecting wires should be copper.
3. Check for burned spots or short in wiring of timer or thermostat.

Warranty on parts is void if installer/ electrician fails to follow necessary wiring information provided or fails to follow code for proper wire size, amperage, etc.

HIGH LIMIT CONTROL

Note! Only persons authorized to carry out electrical installations can reset the high limit control!

Each heater is equipped with a high limit control which is a safety device. If an abnormal heating condition should occur, the heater will automatically shut off, and it will not come on again until it cools.

To reset the high limit, locate the reset button at the bottom front of heater and push upward until contactor kicks in. Be sure that a GFI has not been installed.

Receptacles OR PLUGS are not allowed in a sauna room.

SIZING THE SAUNA HEATER

ADJUSTED CUBIC FEET

The volume and structures of the sauna affect the selection of heater power. The power requirement increases if there are glass surfaces or other cold surfaces such as tile, brick, concrete, or stone walls in the sauna.

In case there are any glass, tile, brick, concrete, or stone walls in the sauna room, an additional volume of 2-ft^3 for each ft^2 of such wall should be added to the sauna room size calculation.

To calculate it yourself, multiply the height by the width and the length in feet. Then calculate the sum of brick, tile, glass, or concrete surfaces (ft^2), multiply it by 2 and add it to the previous result. As a result, you will have your sauna room volume in ft^3, based on which you can choose the suitable stove output. If the result falls between two different output values, we recommend choosing the larger heater/stove.

Finsaunausa.com
800.957.2862
finsauna@bathingbrands.com

ROOM CONSTRUCTION - GENERAL INFORMATION

A. FRAMING
2″ x 4″ any suitable wood material, 16″ o.c.

B. CEILING LIGHT
No higher than 7′0″.

C. INSULATION
R11 Fiberglass with foil back in walls and ceiling, foil facing into room.

D. DRYWALL
See local codes. Is not required in most residences. See local codes commercial. If drywall is used, apply 1″ x 2″ nailers so that wall and ceiling boards can be attached to solid wood.

E. PANELING
Use kiln-dried, clear, T&G softwood such as California Redwood, Western Red Cedar, Alaska Yellow Cedar, pine, spruce or other suitable wood material (with moisture content not exceeding 11%).

F. BENCHES
Use matching wood of vertical grain. Fasten from bottom to prevent burning of bathers.

G. HEATER FENCE
Is necessary for safety and should be constructed of 1″ x 4″ or 2″ x 4″ softwood to match sauna interior. See figures 2 - 4 clearances from sauna heater. Fence should attach to wall and should not be placed higher than top of heater below rock line.

H. DOOR
Must open out and should not have a lock.

I. FLOORING
Concrete, ceramic tile, or heavyduty vinyl.

J. VENTILATION
Should be provided by lower vent close to heater, 4″ from floor, and upper vent on opposite wall (if possible) 6″ from ceiling or as low as 24″ from floor. Vents should be adjustable and should allow air to change 5 times per hour. Sauna shall be provided with intended ventilations as required per the local code authorities.

K. LIGHT
Should be wall-mounted, vapor proof type, with rough-in box mounted flush with inside paneling. It should mount 6′ 6″ from the floor, not directly over sauna heater, and not over upper benches; light bulb should not exceed 75 watts.

L. ACCESSORIES
Bucket, dipper and thermometer are essential. Thermometer should be placed over the sauna heater, 6″ from ceiling, for correct temperature reading. Other accessories such as hygrometer, sand timer, brushes, etc. are available.

M. MAINTENANCE INSTRUCTIONS
Are included at the end of this manual.

N. WARNING SIGNS
Are furnished with sauna heater. The metal "CAUTION" sign should be fastened to wall, close to heater, in a visible place. The metal "Warning" sign should be fastened outside, to the sauna room door.

WARNINGS!

*** Do not smoke, use alcohol, or exercise in the sauna!**
*** Do not exceed 30-minutes in the sauna at one time, as excessive exposure can be harmful to health. The sauna should not be used as an endurance test!**
*** Persons with poor health should consult their physicians before using the sauna!**
*** Avoid fire, do not place any combustible material over the sauna heater (towels, bathing suits, wooden bucket or dipper)!**
*** Use only clean water on the stones - do not use pool or spa water, as chlorine gas can be produced and the heating elements can be damaged!**
*** Hyperthermia occurs when the internal temperature of the body reaches a level several degrees above the normal body temperatures of 98.6°F (37°C). The symptoms of hyperthermia include an increase in the internal temperature of the body, dizziness, lethargy, drowsiness, and fainting.**
*** The effects of hyperthermia include:**
A) Failure to perceive heat
B) Failure to recognize the need to exit the room
C) Unawareness of impending hazard
D) Fetal damage in pregnant women
E) Physical inability to exit the room
F) Unconsciousness
*** Warning - the use of alcohol, drugs or medication is capable of greatly increasing the risk of fatal hypothermia!**

MAINTENANCE INSTRUCTIONS

1. Use only clean water on sauna stones. Do not use spa or pool water as it will destroy your heater.
2. Clean water should always be used in sauna buckets and water should be dumped out after every use. Scour buckets and dipper occasionally when film collects from usage. Use plastic bucket liner in bucket to prevent water leakage.
3. Scrub benches with a soft brush, using soap and water or a mild disinfectant, when needed - about once a week in commercial saunas, or depending on sauna usage. For sanitation, each bather should sit or lie on a towel (this will prolong bench life).
4. Remove possible removable flooring and wash waterproof floor with disinfectant (e.g. Pine-Sol) about once a week or as often as needed. Hose off removable flooring to clean.
5. To maintain beautiful appearances of sauna heater, remove water stains by wiping with a damp cloth occasionally.
6. Sauna heaters require no special maintenance when properly installed by a qualified electrical contractor. After 5-years of usage, the rocks may need replacing if they have crumbled or powdered.
7. We strongly recommend a floor that can be easily cleaned (concrete, ceramic tile, or a poured type of flooring). When this is provided, the sauna can be easily cleaned and kept in a sanitary condition with little effort. A carpet is NOT recommended for a sauna! A carpet becomes a perfect breeding ground for bacteria in the moist conditions of a sauna; and a carpet promotes the spread of foot diseases such as athlete's foot.
8. In new construction, a floor drain should also be provided, especially in commercial saunas for sanitary cleaning and maintenance.
9. Seal wood around glass in door - inside and outside - with Thompson's Water Seal to prevent warpage.
10. When sauna wood becomes stained from perspiration, the wood may be lightly sanded with fine sandpaper to restore beautiful appearance. We do not recommend stains or sealers as toxic vapors may appear when heated.
11. The sauna room will heat faster if the higher vent is kept in a closed position when heating. The lower vent may always be kept in an open position.
12. Required warning signs should be posted according to the instructions.

Owner of the sauna heater must make sure that the sauna heater is turned off correctly every time after bathing.

Owner of the sauna must obey these maintenance instructions!

Finsaunausa.com
800.957.2862
finsauna@bathingbrands.com

GUARANTEE

This FINSAUNA heater is guaranteed for one-year from date of purchase, and includes all heater parts such as heating elements, controls, contactors, etc.

This guarantee covers faults in manufacture and material only, and includes the exchange of new parts supplied by the manufacturer or importer, after the faulty part has been returned to same. The replacement of parts under warranty does not extend the warranty period beyond the original one-year.

The guarantee does not cover defects caused by normal wear and tear, defects caused by improper installation, poor maintenance, or failure to follow the manufacturer's instructions for installation, use and care, or alterations made to the sauna product.

This guarantee is void if the heater is used improperly, pool or spa water should not be poured over the sauna stones, as chemicals are harmful to the heater; the sauna room must be heated for at least 30-minutes before water is poured over the stones; only one or two dippers full of water should be poured over the hot stones at one time. This guarantee will be void if a shower has been installed in the sauna room.

This guarantee does not cover delivery costs of the faulty part or costs of the person carrying out the repair in the field. If the sauna heater is returned to the manufacturer or the importer within five-years after date of purchase, the importer will provide free labor for repair, but will charge for parts if date of purchase is past one-year.

This guarantee will be void if installation and wiring is not carried out by a certified electrician or authorized and qualified service representative, who must sign below.

This guarantee will be void if information below is not filled out and returned within 15-days of purchase, and it applies only to original installation of product and to original purchaser.

SAUNA HEATER _____

MODEL NUMBER _____

DATE OF PURCHASE _____

ORIGINAL OWNER _____

ADDRESS _____

_____

PURCHASED FROM _____

_____

ELECTRICIAL CONTRACTOR
MUST SIGN HERE _____

DATE OF ELECTRICAL
WIRING & HOOKUP _____