Vivida 400 Outdoor Sauna

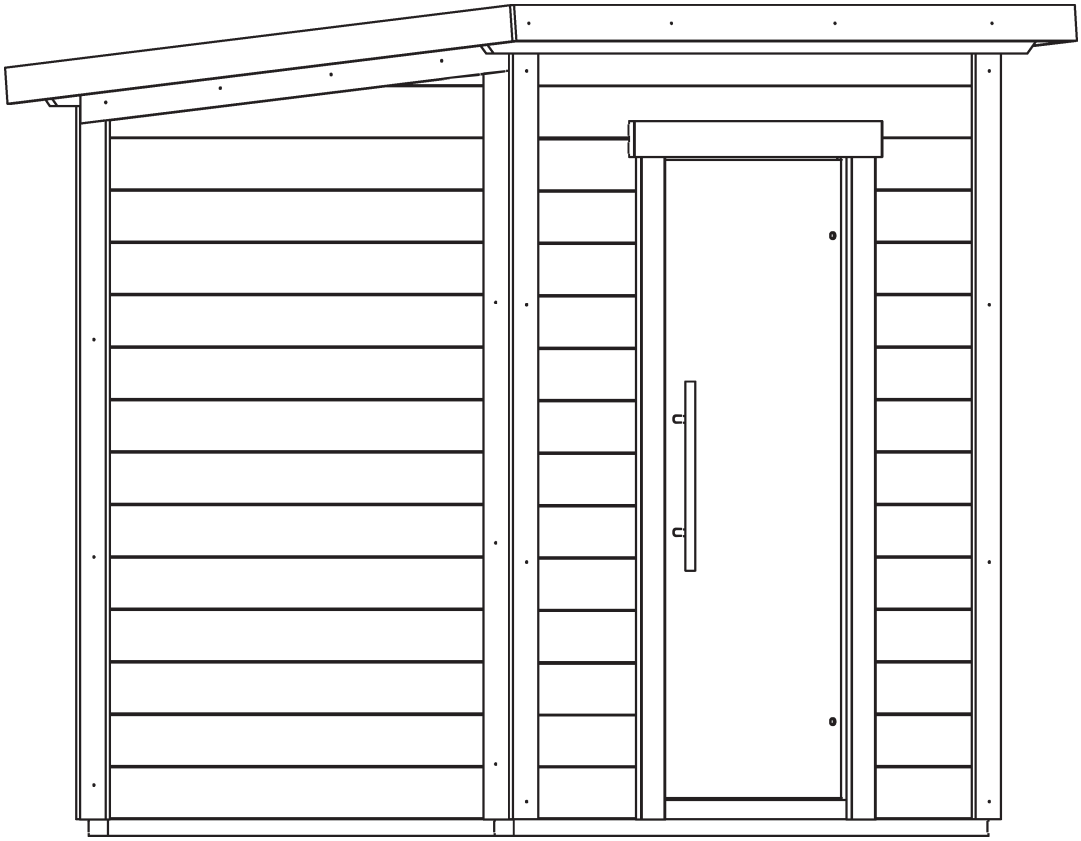

Note: Please read manual before construction

REV: 1.0_10/2024

FINSAUNA®

Vivida 400 Outdoor Sauna Room

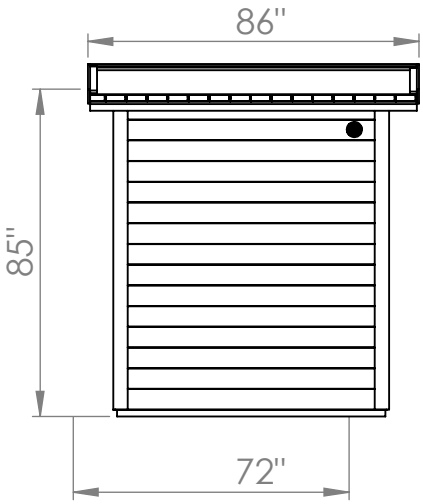

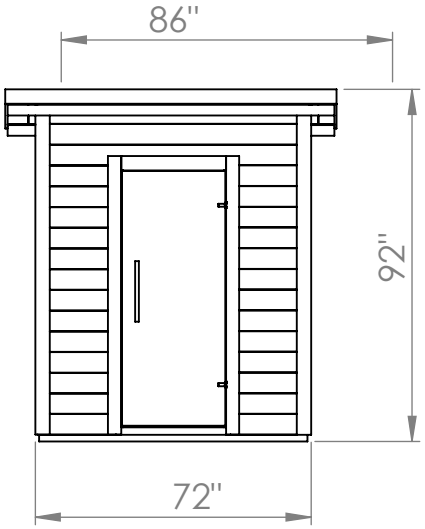

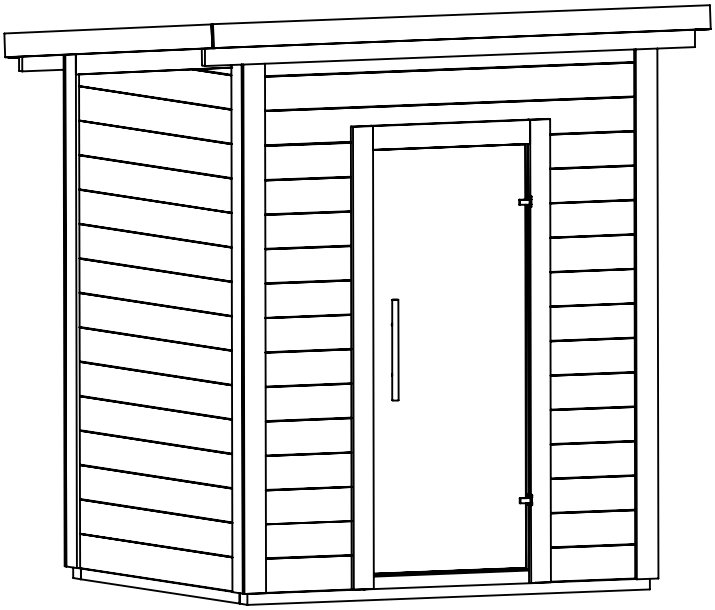

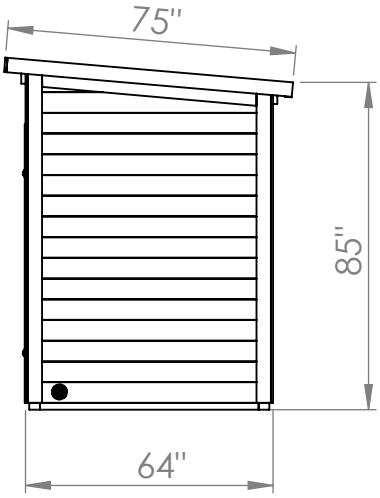

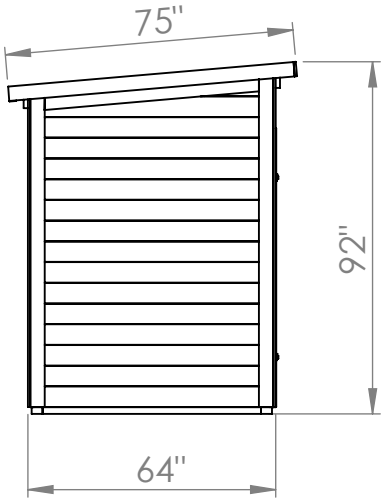

REV: 1.0_10/2024

1.1	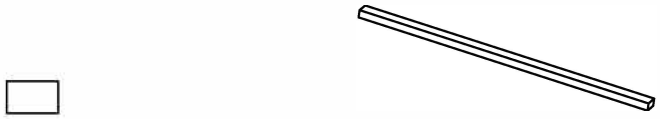	1.73" x 2.79" x 69.84"	2
1.2		1.73" x 2.79" x 56.92"	4
2.1		1.73" x 1.73" x 81.69"	2
2.2	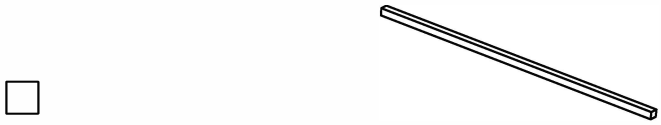	1.73" x 1.73" x 76.57"	2
W1		1.65" x 5.70" x 70.62"	16
W2		1.65" x 5.70" x 61.41"	28
W3		1.65" x 5.70" x 20.27"	13
W4		1.65" x 5.70" x 20.27"	13
L1		1.65" x 5.31" x 61.41"	1
L2		1.65" x 5.31" x 61.41"	1

3.1	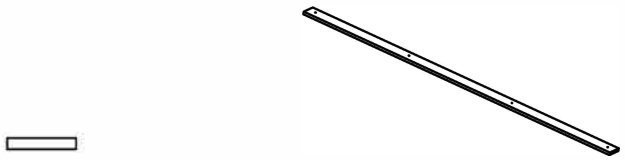	.59" x 3.74" x 79.60"	2
3.2		.59" x 3.74" x 74.17"	2
3.3		.59" x 3.74" x 77.91"	2
3.4	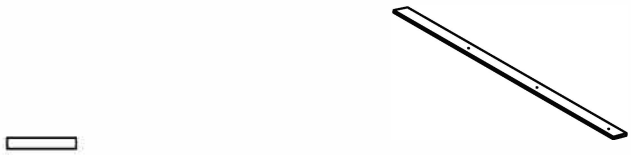	.59" x 3.74" x 72.71	2
3.5		.59" x 3.74" x 63.62"	2
4.1	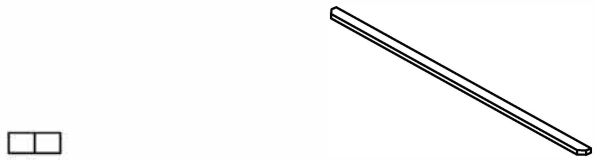	1.10" x 2.79" x 81.29"	2
4.2	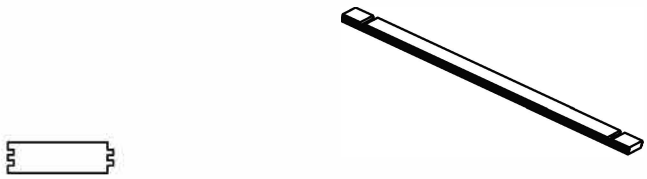	1.65" x 5.70" x 74.56"	15
4.3		.70" x .98" x 81.29"	1
5		.74" x 3.74" x 66.92"	16

6.1		1.73" x 1.73" x 20.27"	2
6.2		1.73" x 1.73" x 11.10"	2
7.1		.59" x 3.74" x 82.48"	1
7.2		.59" x 3.74" x 74.56"	2
Bench1	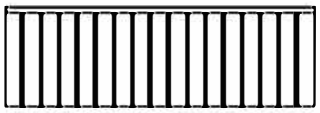	66.92" x 21.37" x 66.92"	1
Bench2	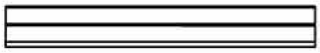	66.92" x 3.54" x 8.66"	1
Bench3	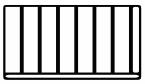	29.33" x 15.66" x 3.54"	1
Backrest1		66.92" x 10.23" x 1.96"	1
Backrest2		36.45" x 10.23" x 1.96"	1

Door	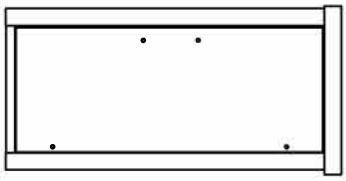	72.63" x 36.41" x 3.22"	1
T	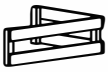	28.70" x 2.39"	1
H	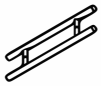		1

Screws	.19" x 4.72"	12
Screws	.17" x 2.75"	228
Screws	.15" x 2.36"	14
Screws	.15" x 1.96"	68
Screws	.13" x 1.57"	82
Screws	.18" x .98"	12
Nails		128
E		2
G		2

Vivida 400 Outdoor Sauna Room

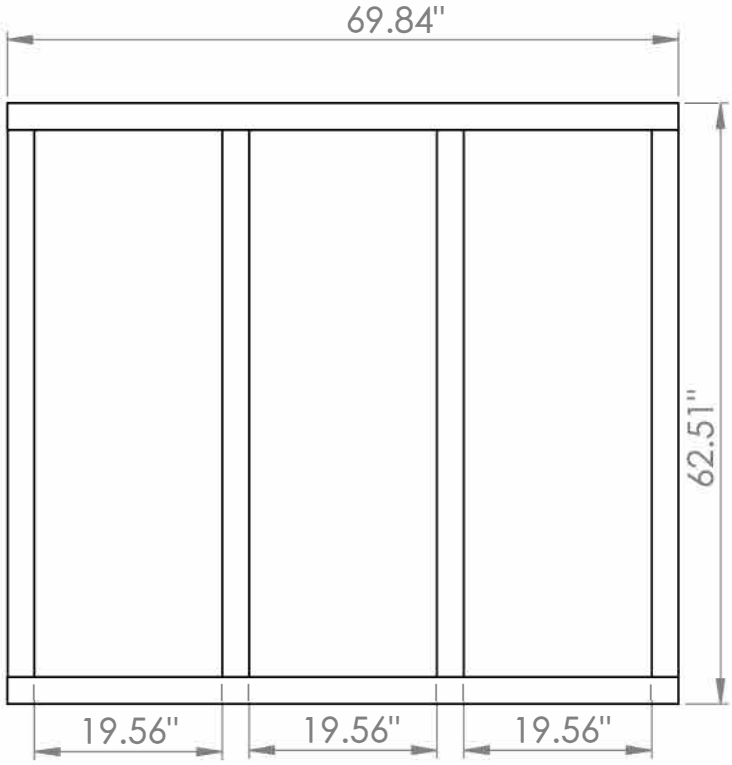

1.1	2
1.2	4
4.72" screws	12

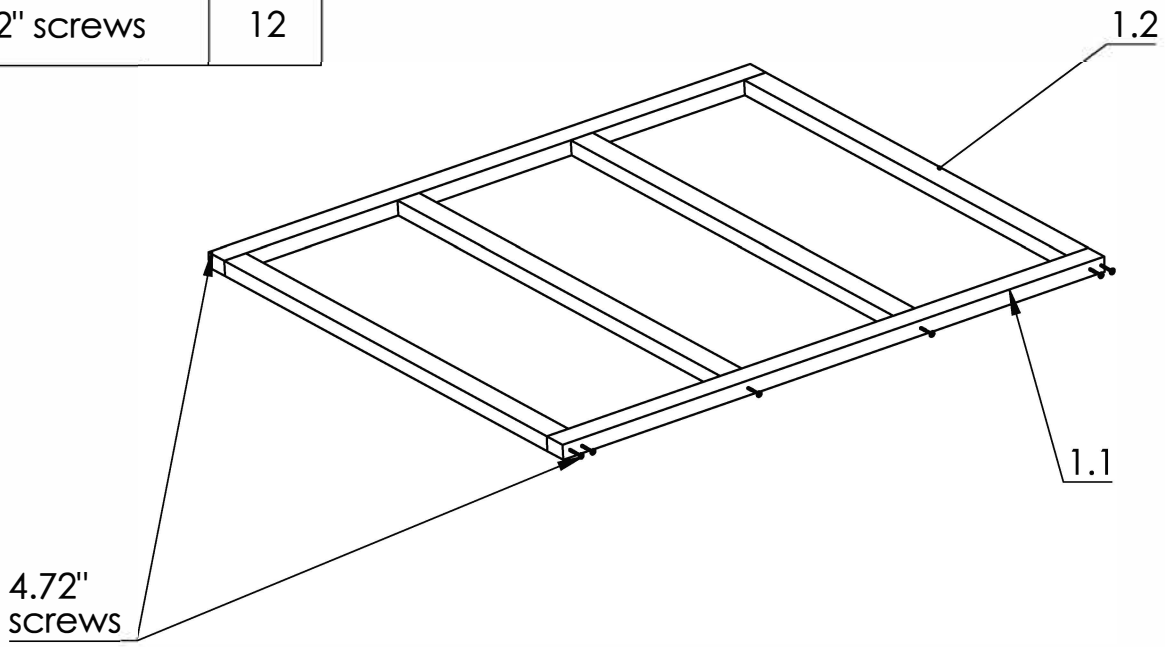

Vivida 400 Outdoor Sauna Room

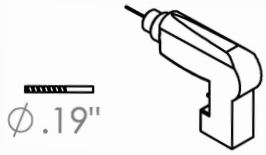

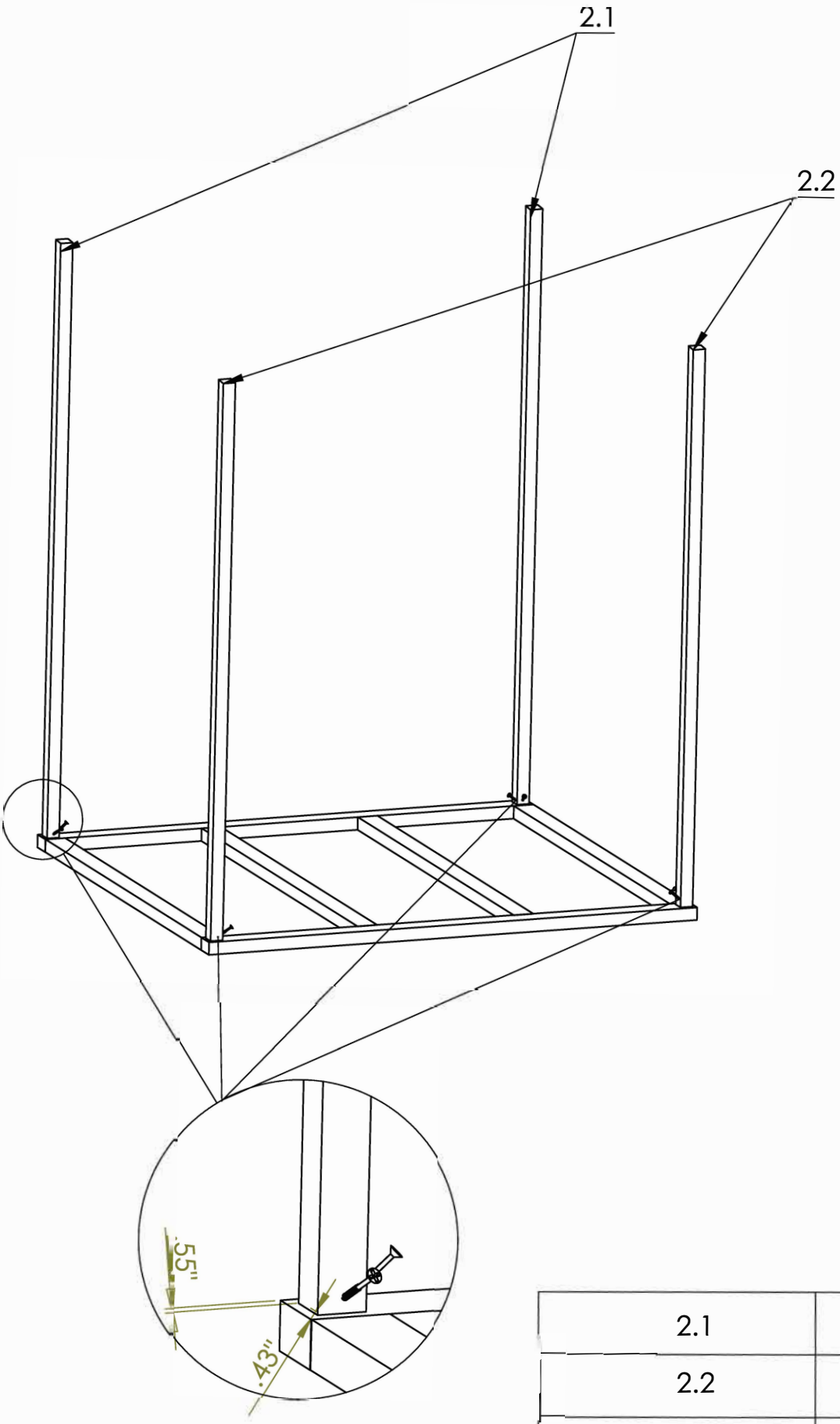

2.1	2
2.2	2
1.96" screws	8

Vivida 400 Outdoor Sauna Room

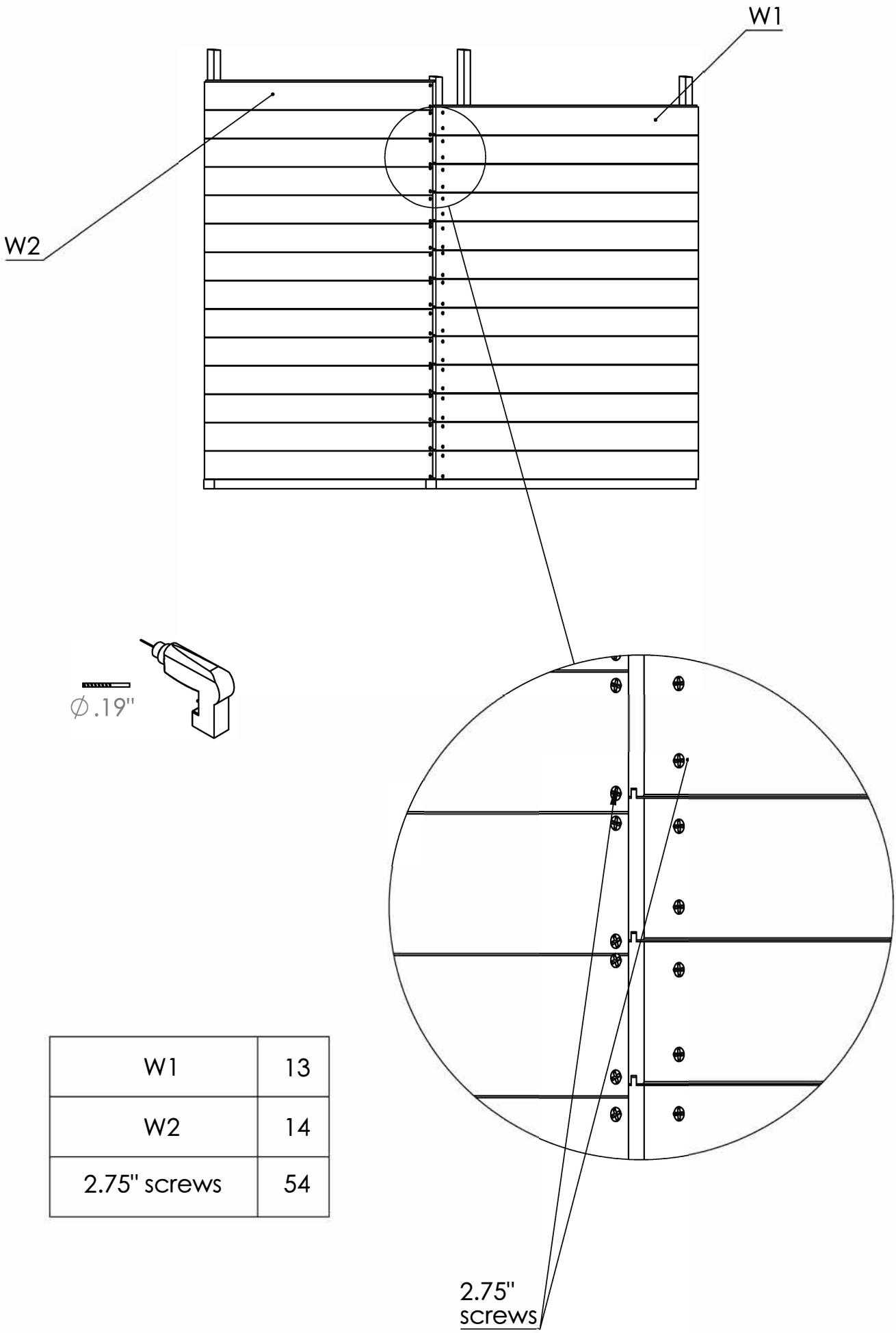

W1	13
W2	14
2.75" screws	54

Vivida 400 Outdoor Sauna Room

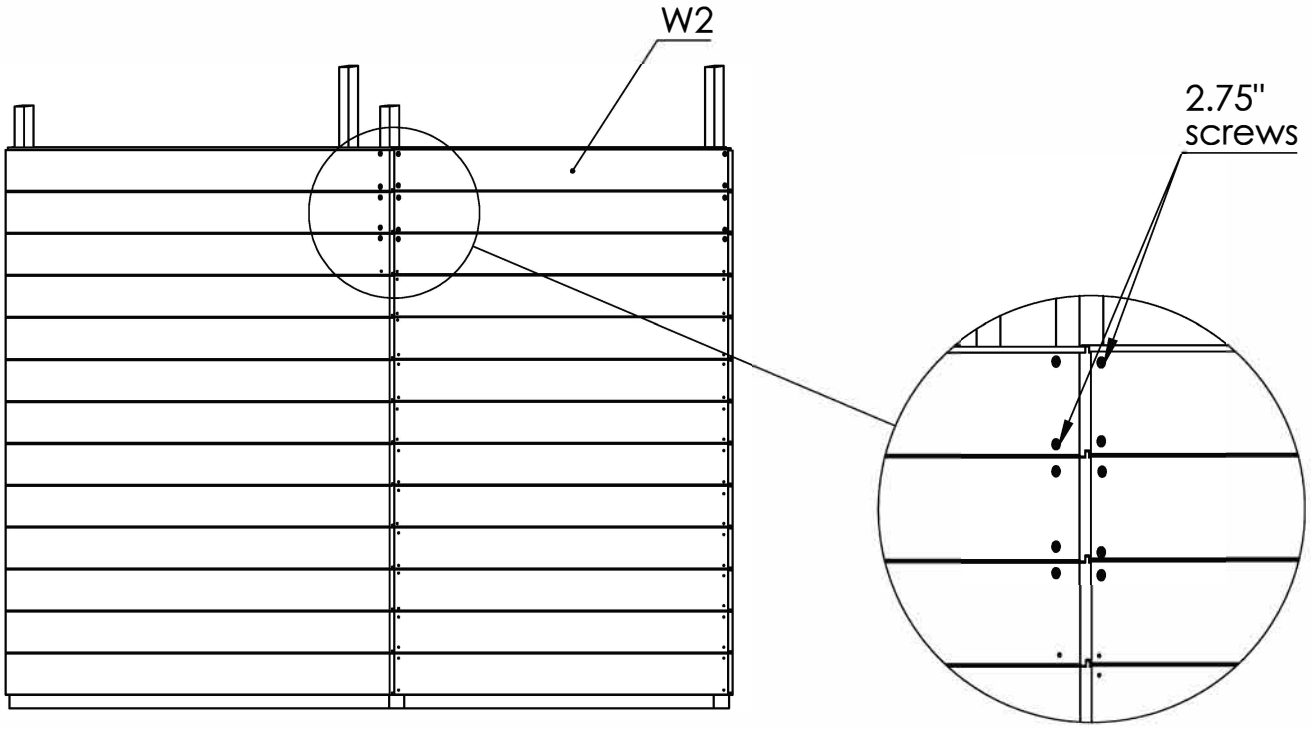

W2	13
W4	13
2.75" screws	104

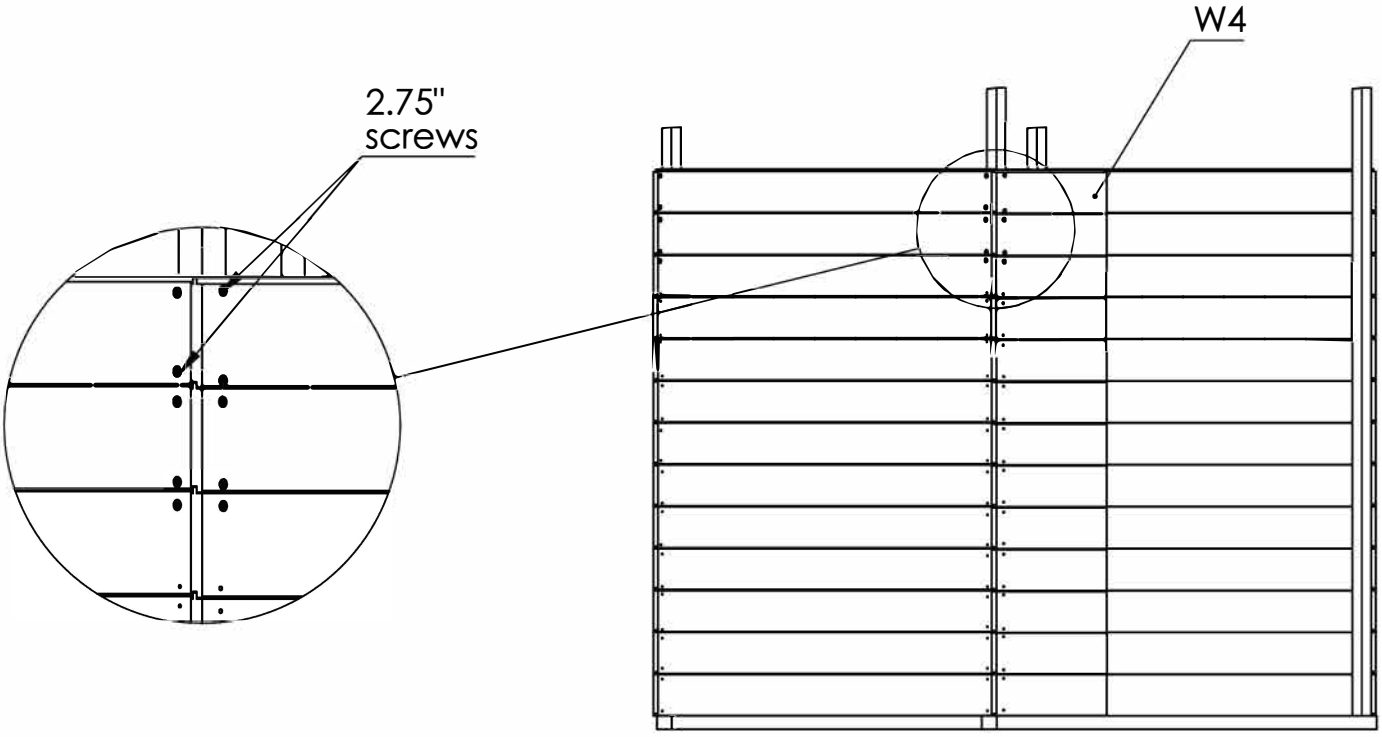

Vivida 400 Outdoor Sauna Room

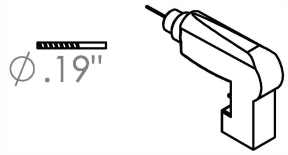

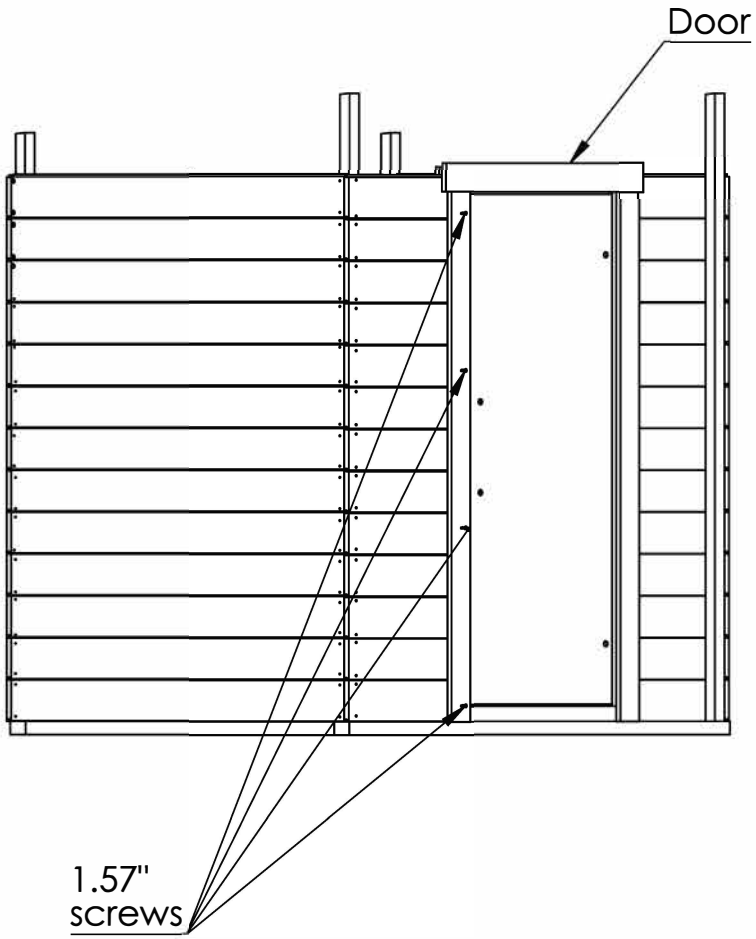

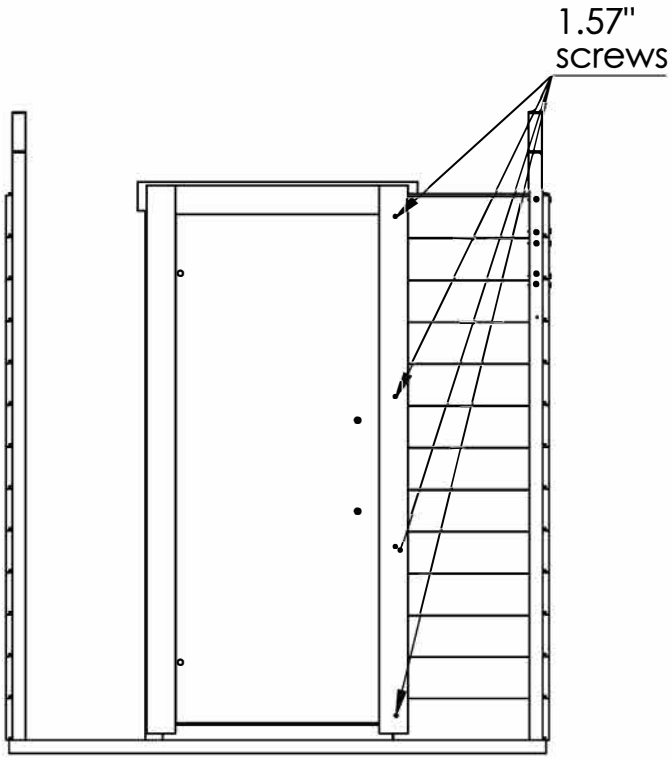

Door	1
1.57" screws	8

Vivida 400 Outdoor Sauna Room

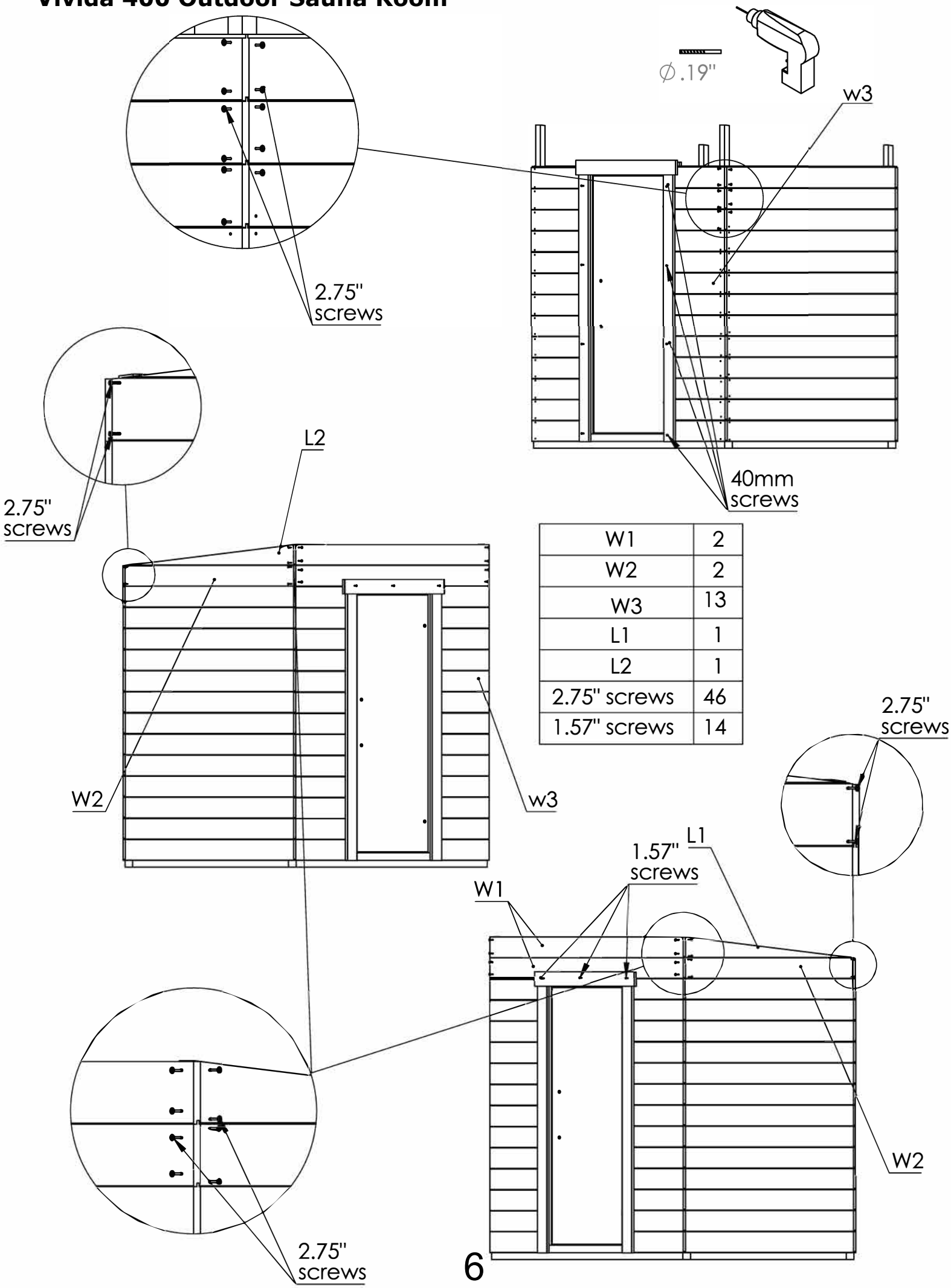

W1	2
W2	2
W3	13
L1	1
L2	1
2.75" screws	46
1.57" screws	14

Vivida 400 Outdoor Sauna Room

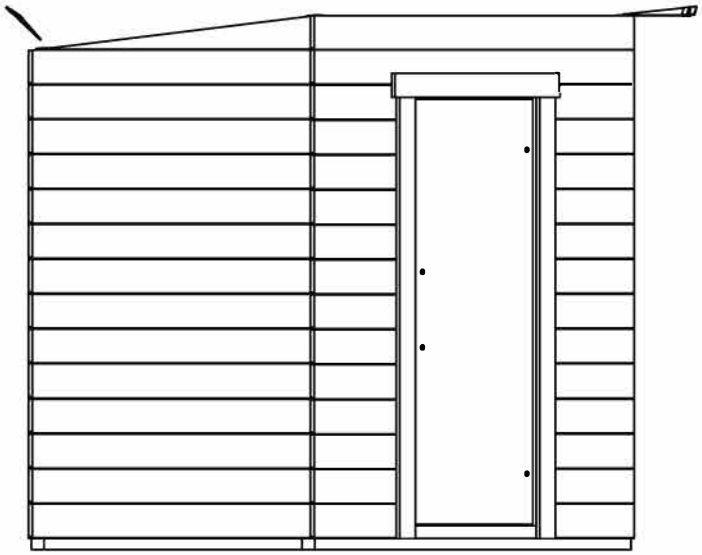

3.1	2
3.2	2
3.3	2
3.4	2
3.5	2
1.57" screws	40

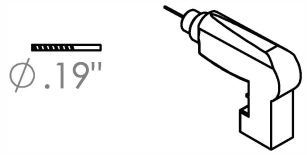

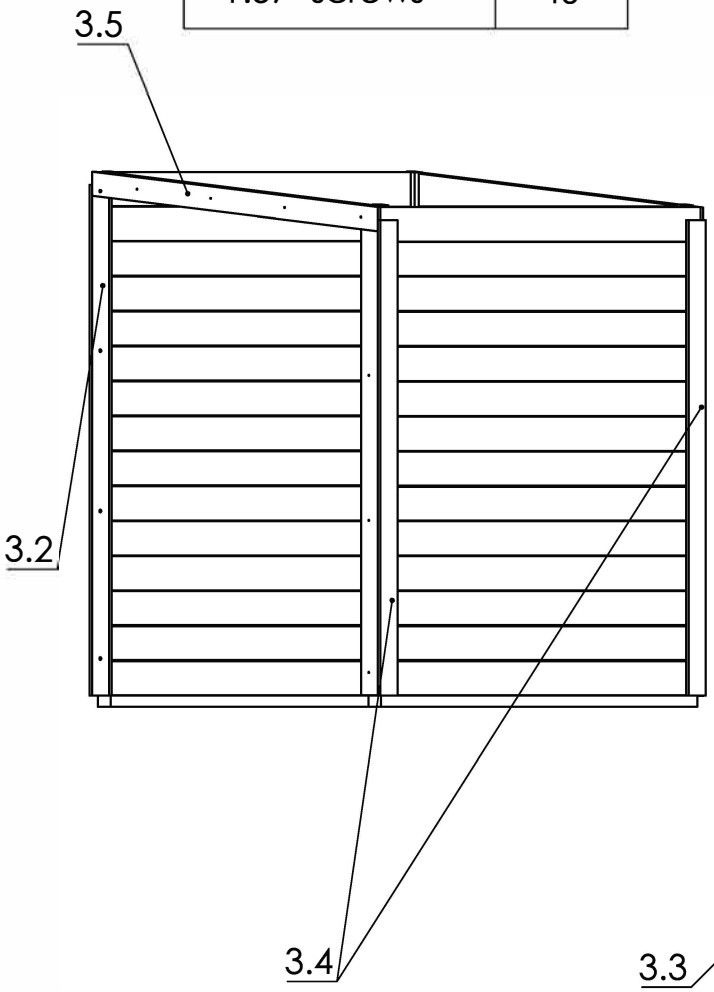

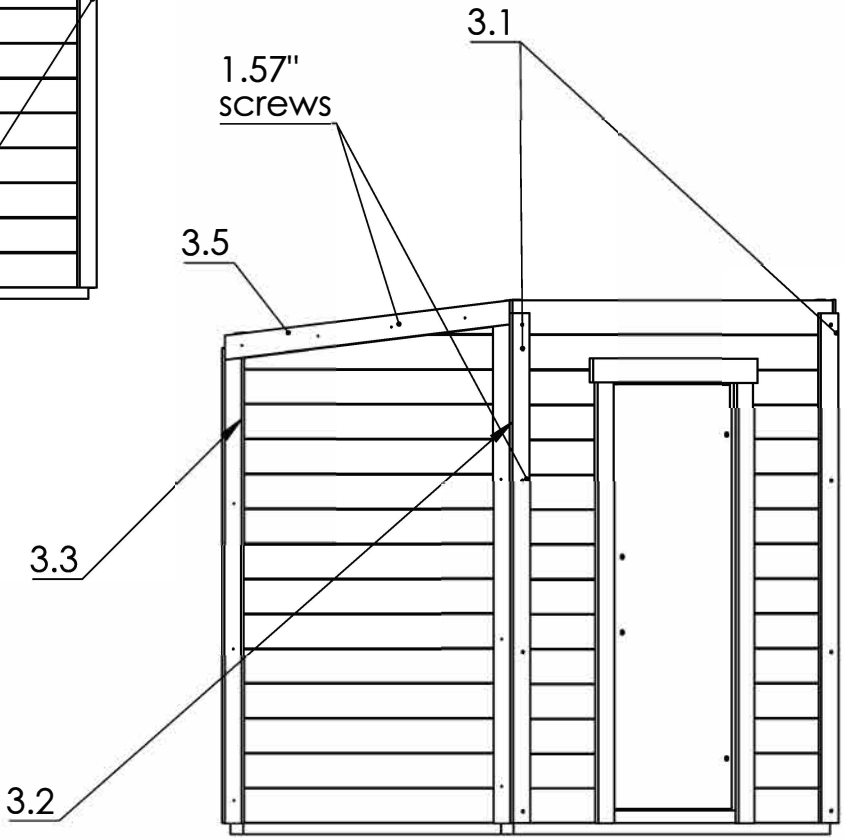

Vivida 400 Outdoor Sauna Room

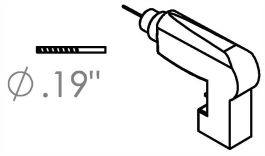

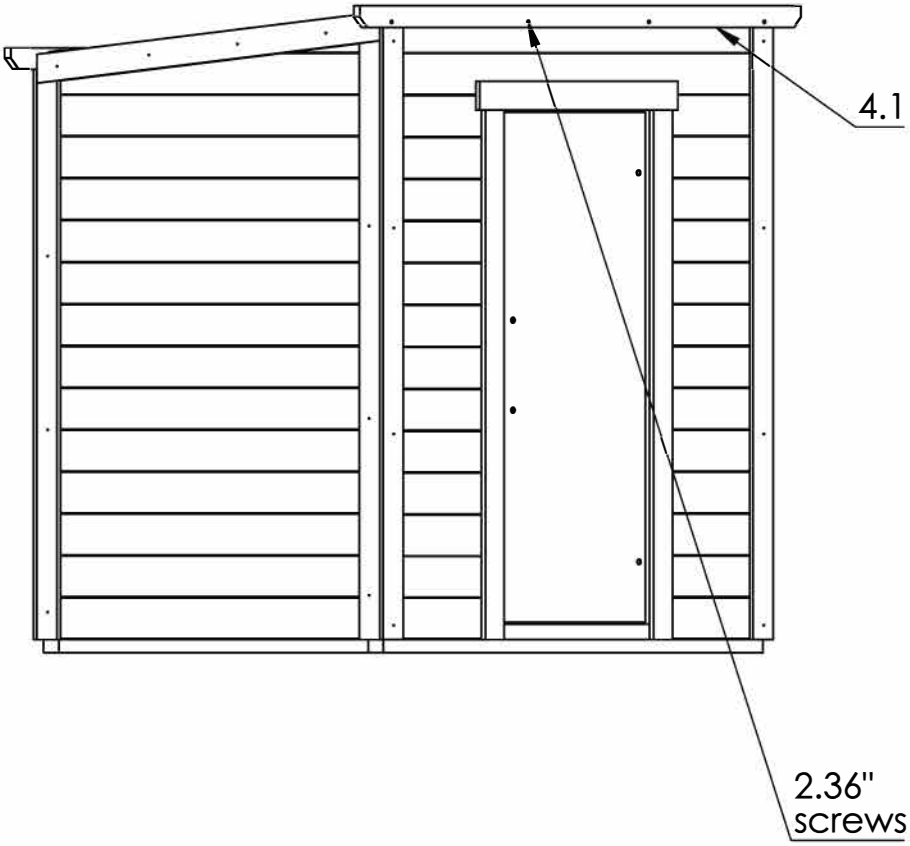

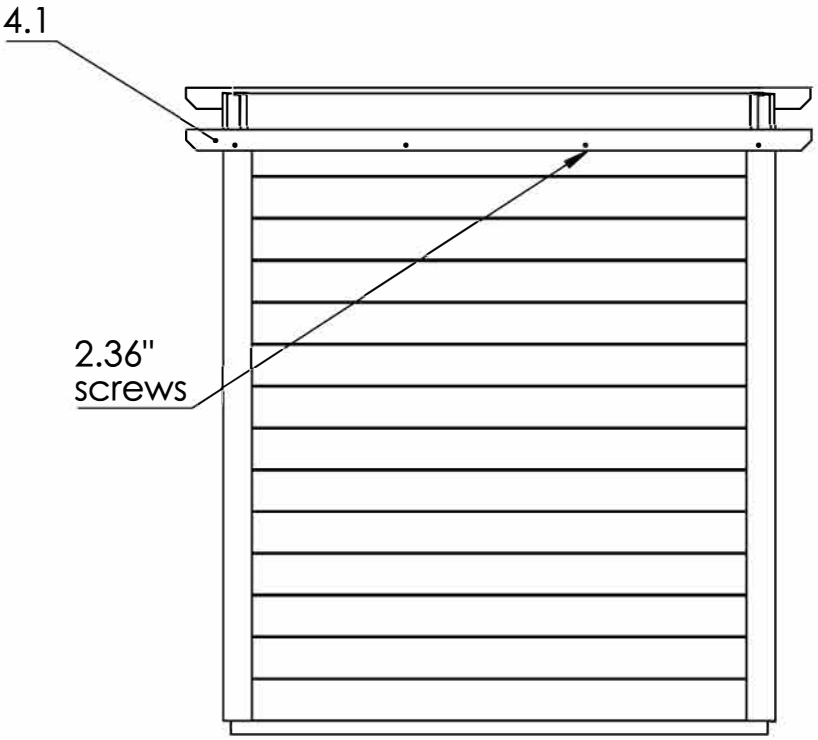

4.1	2
2.36" screws	8

Vivida 400 Outdoor Sauna Room

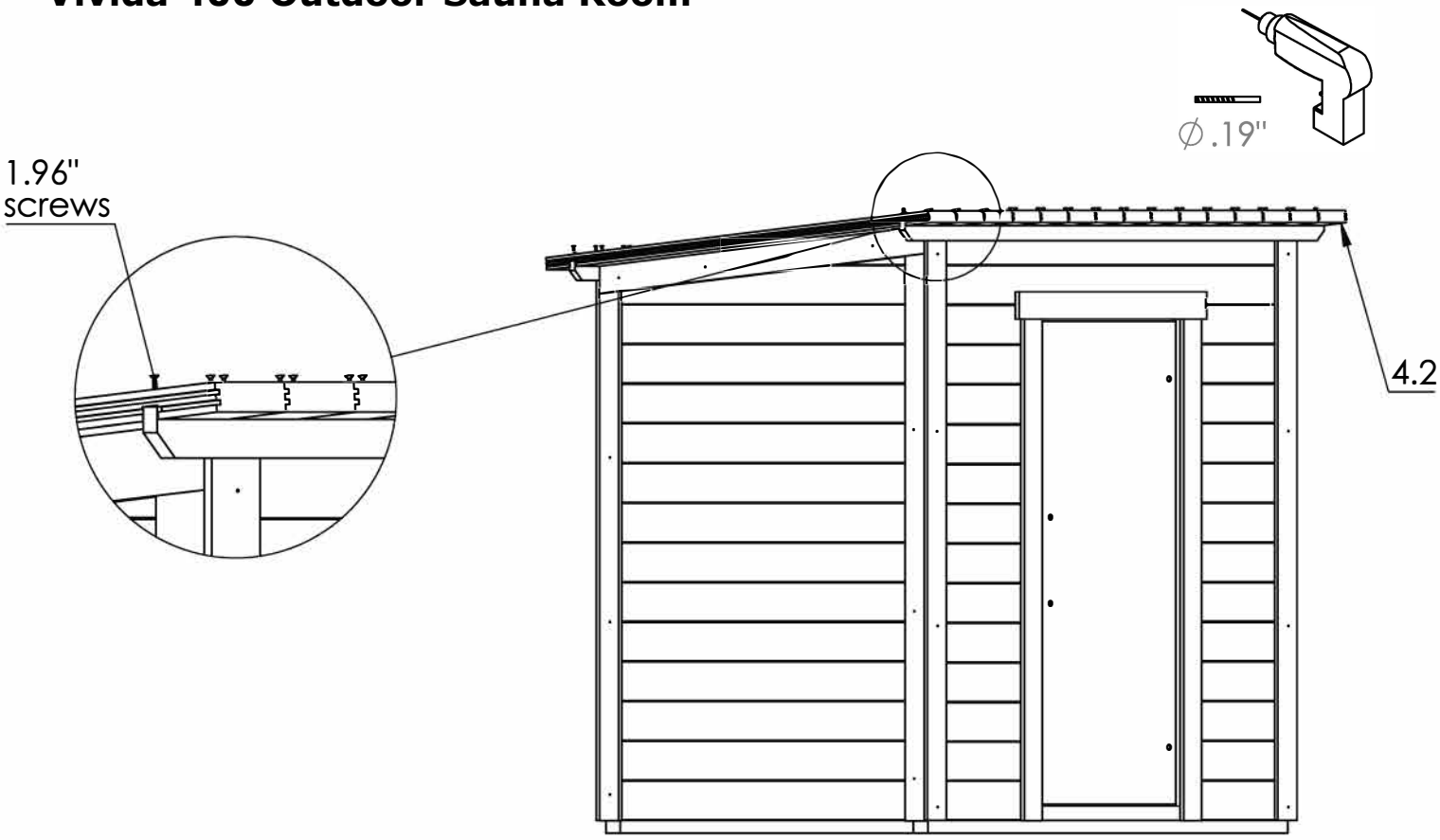

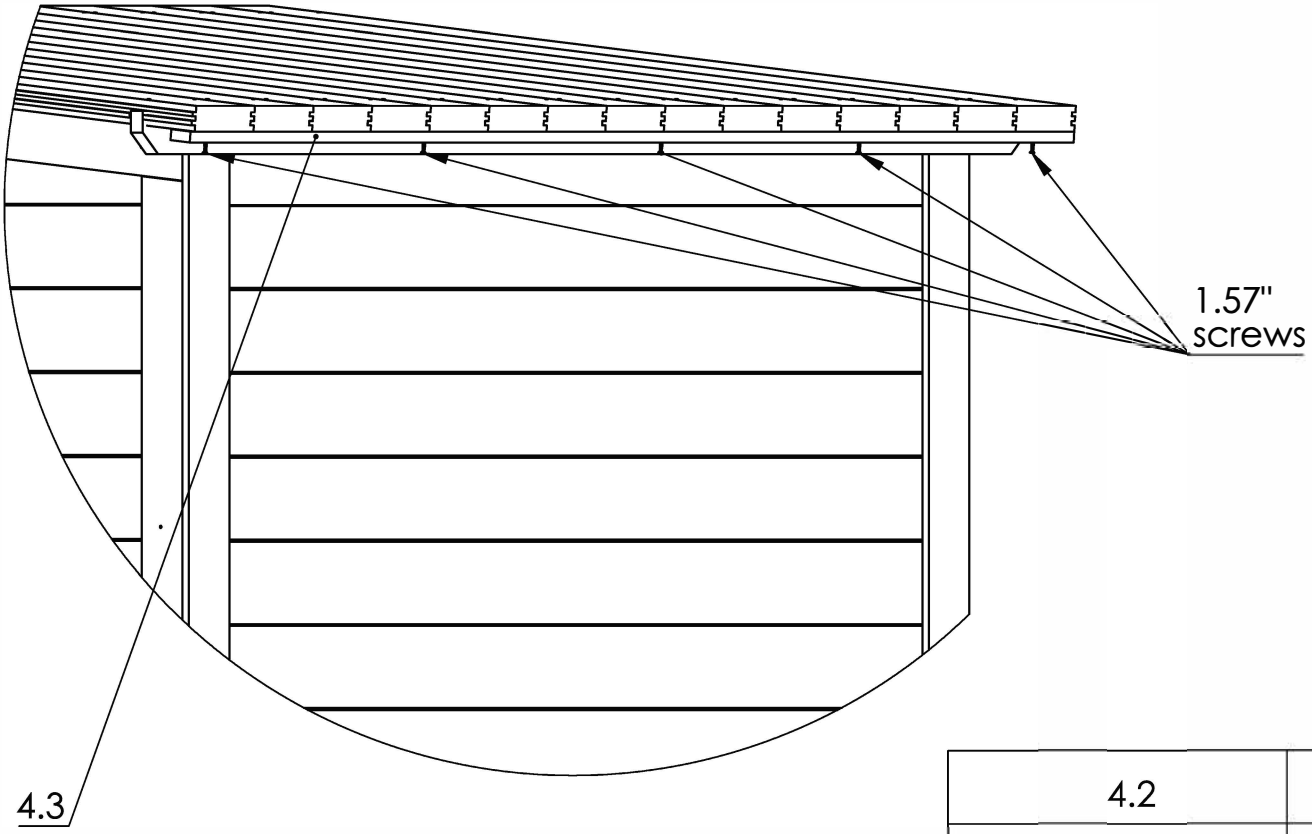

4.2	15
1.96" screws	60
4.3	1
1.57" screws	5

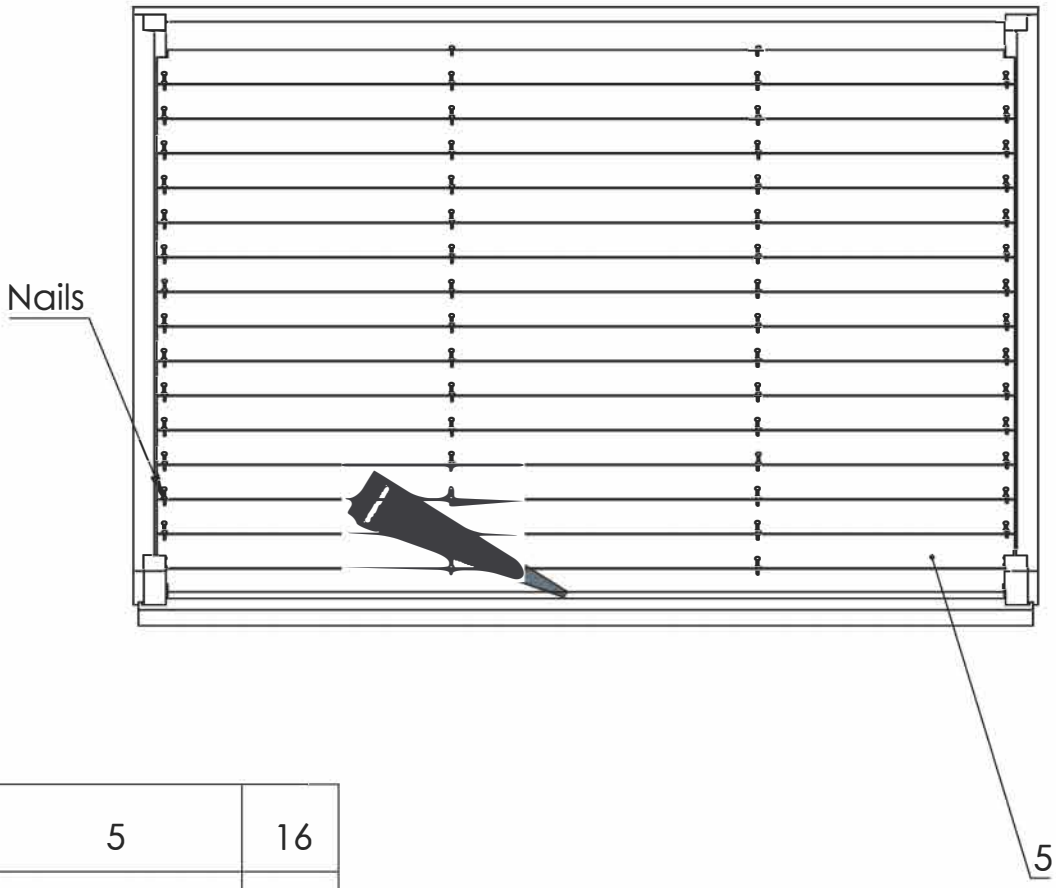

5	16
Nails	128

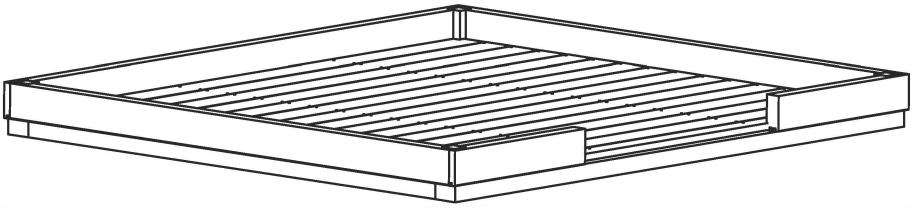

Vivida 400 Outdoor Sauna Room

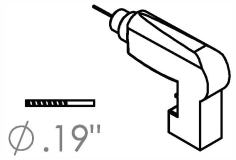

6.1	2
Bench1	1
Bench2	1
2.75" screws	6

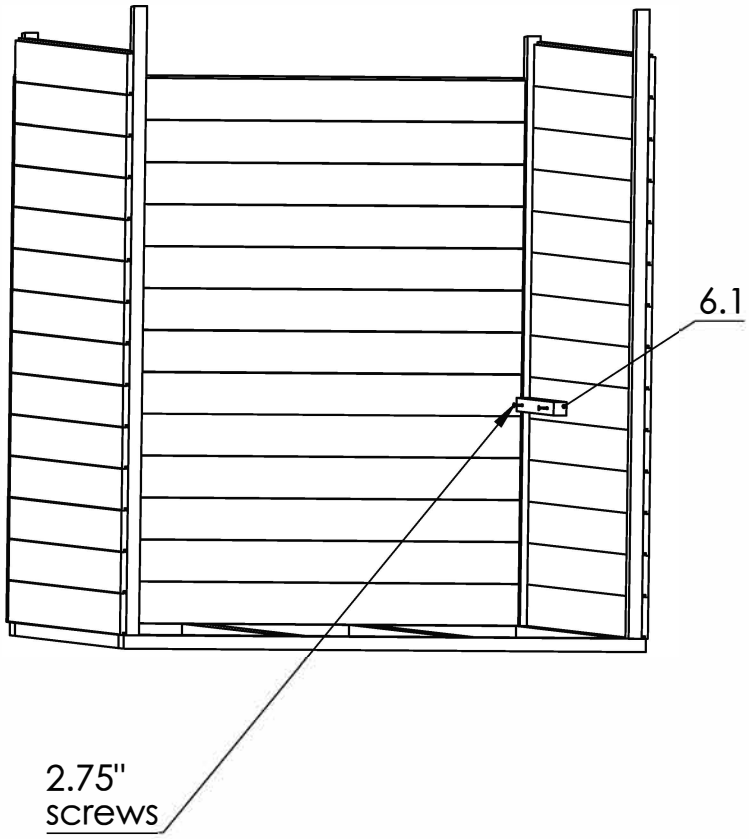

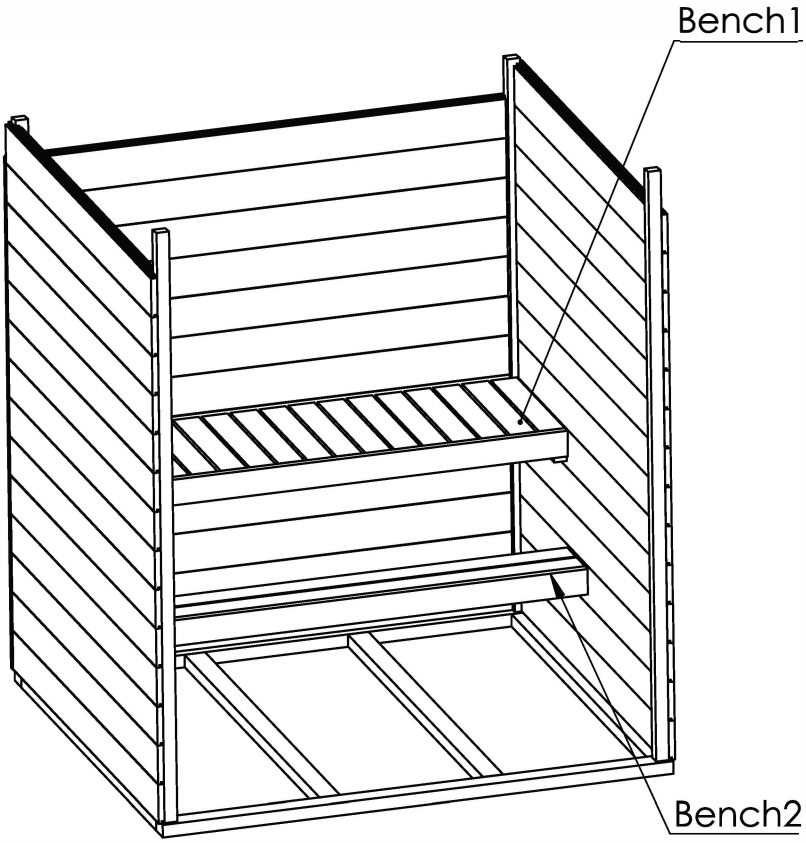

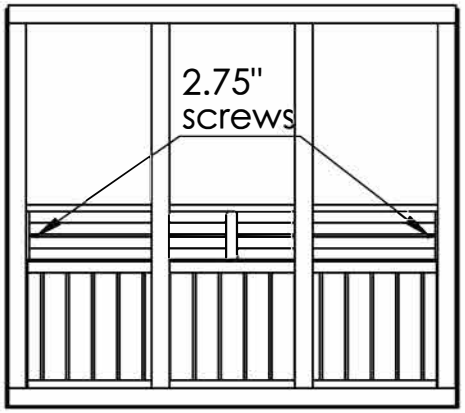

Vivida 400 Outdoor Sauna Room

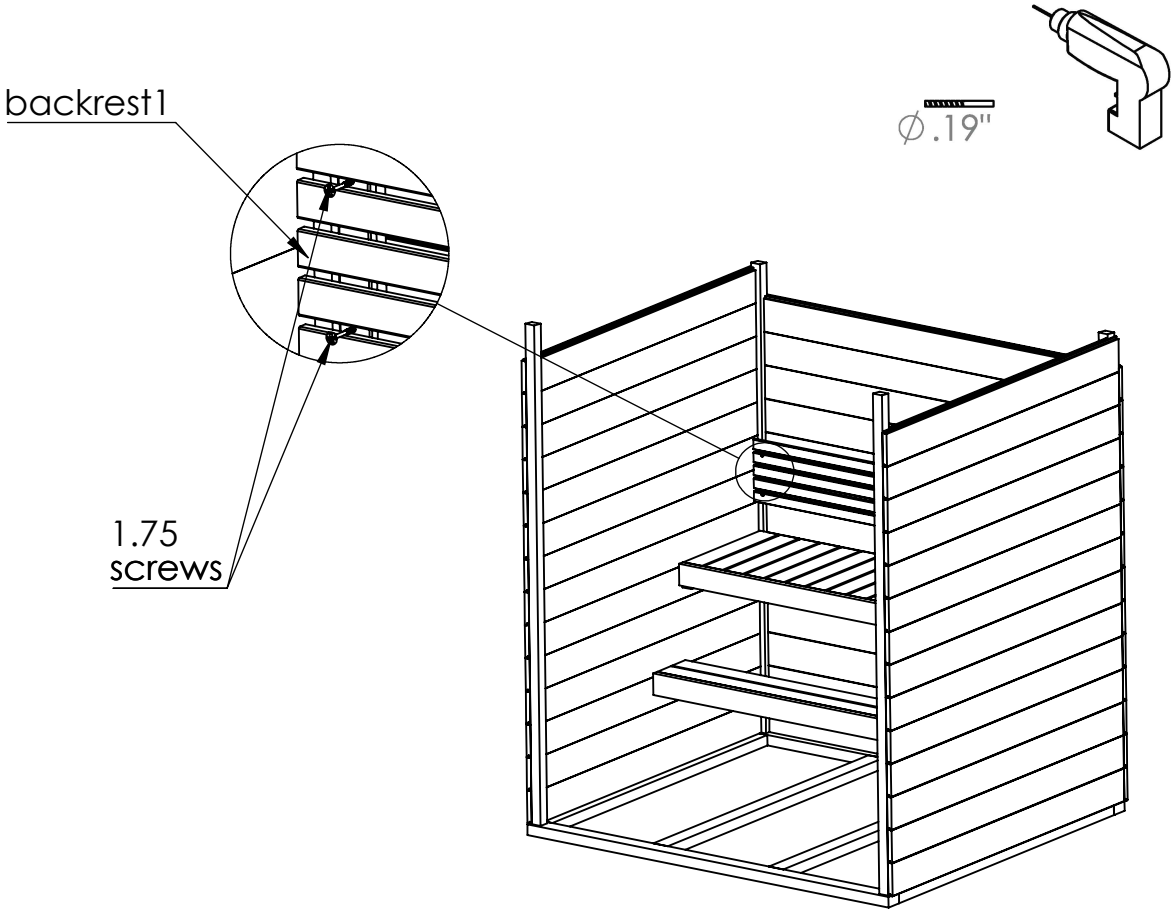

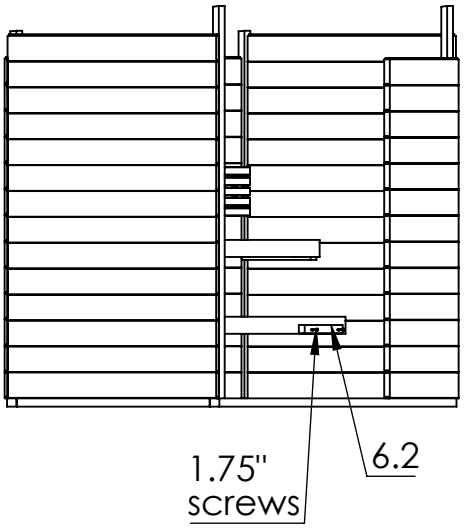

backrest1	1
6.2	2
1.75" screws	12

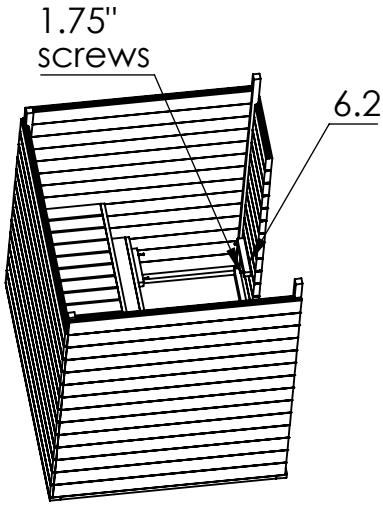

Vivida 400 Outdoor Sauna Room

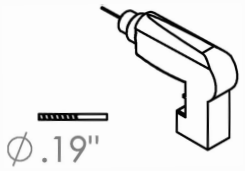

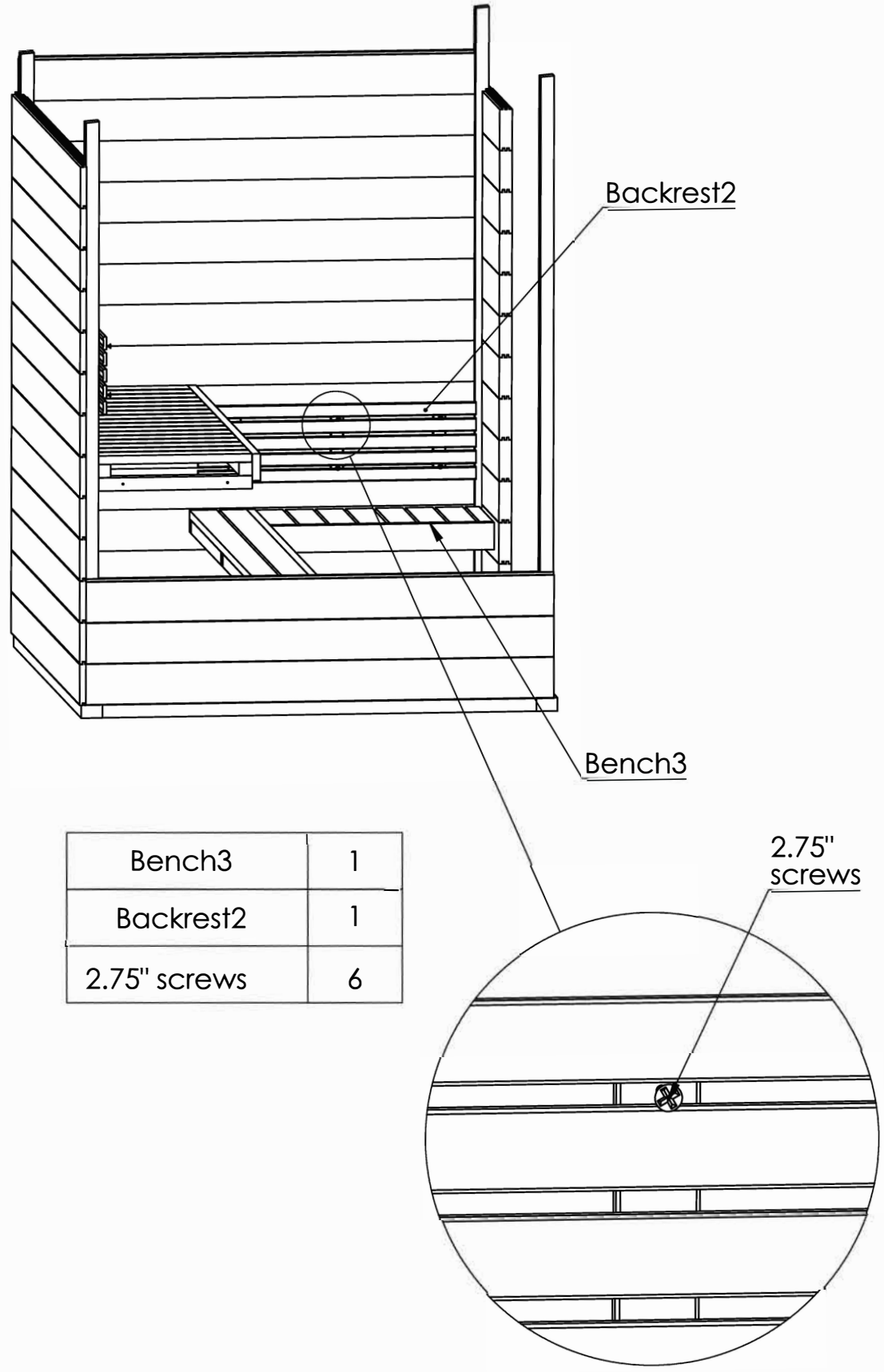

Bench3	1
Backrest2	1
2.75" screws	6

Vivida 400 Outdoor Sauna Room

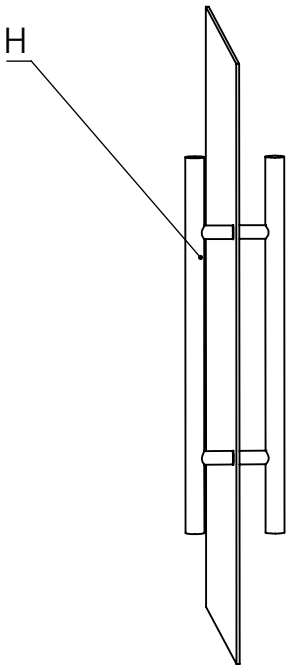

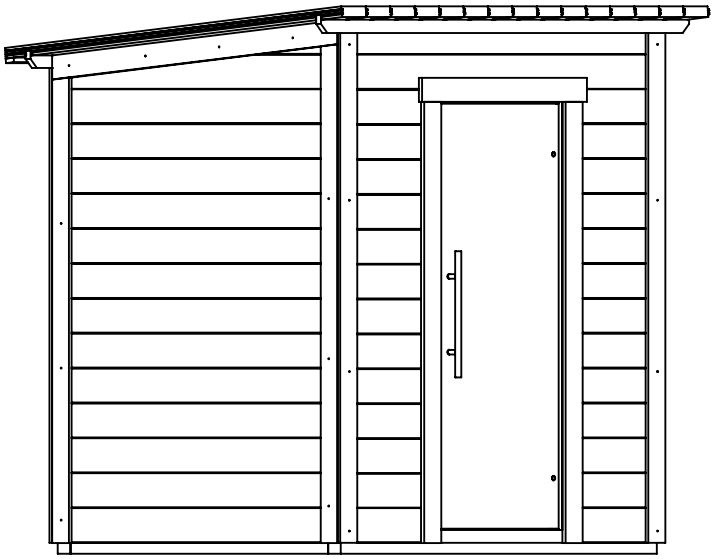

H	1
T	1
2.36" screws	6

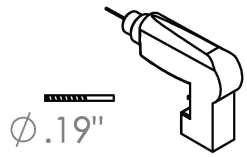

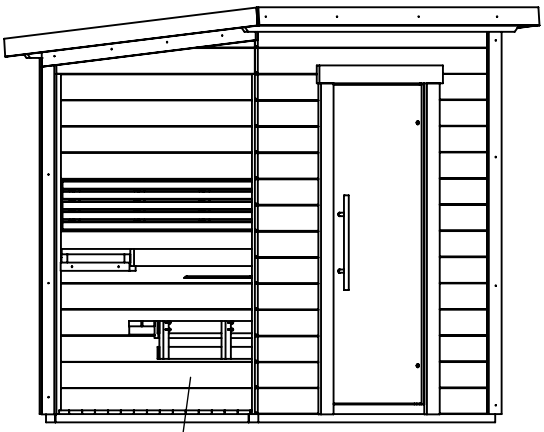

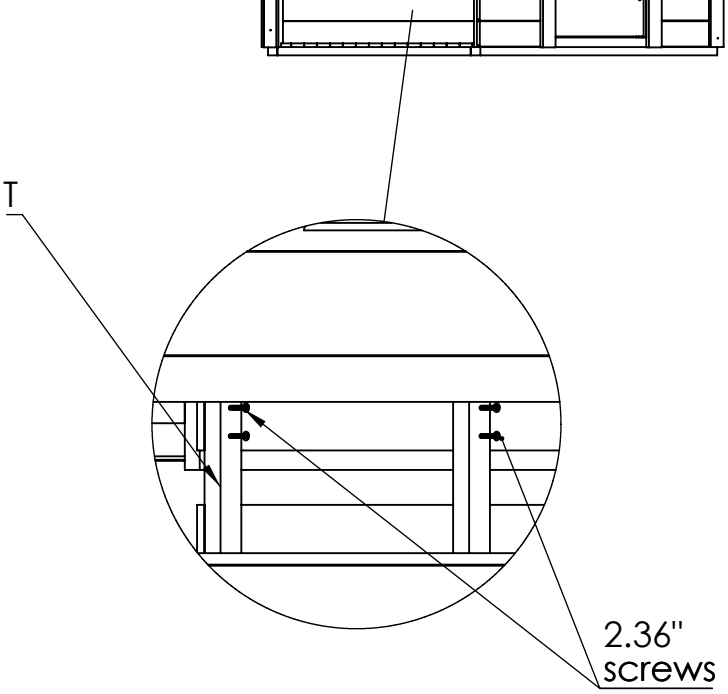

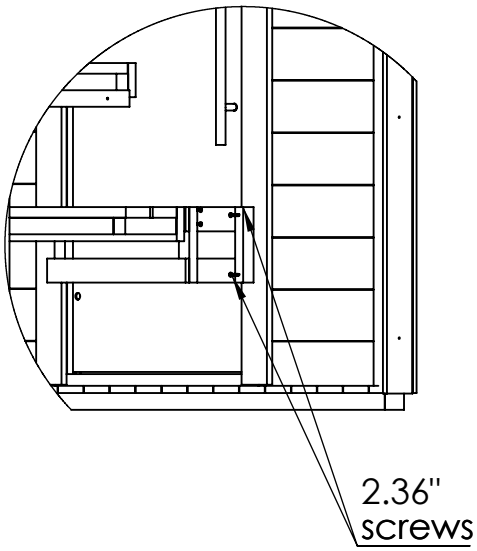

Vivida 400 Outdoor Sauna Room

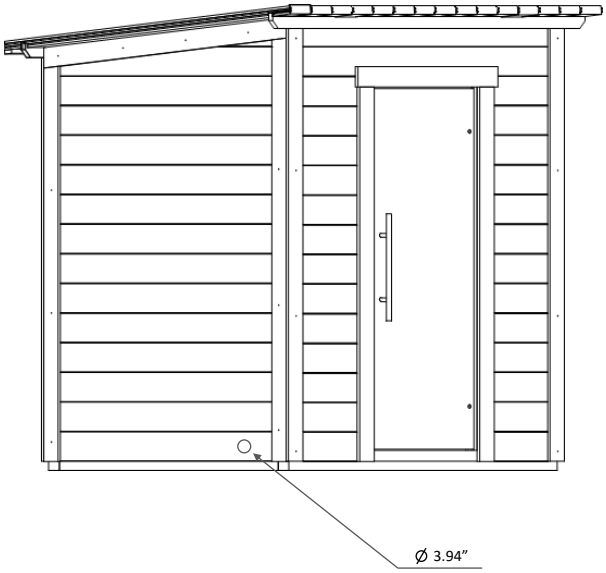

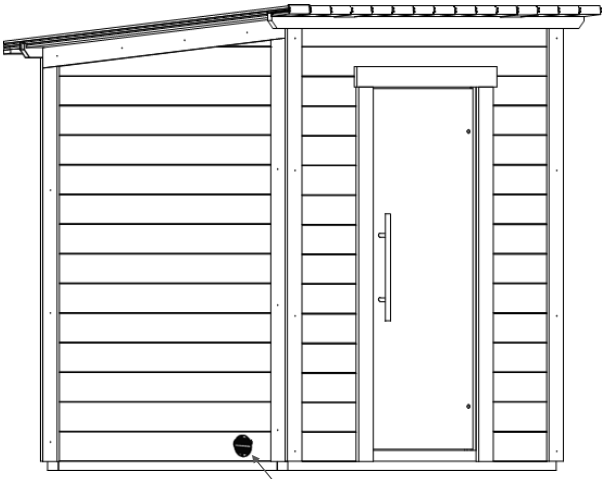

E	4
G	2
.98" screws	12

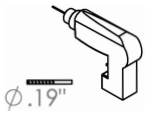

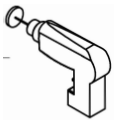

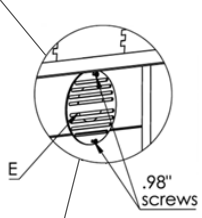

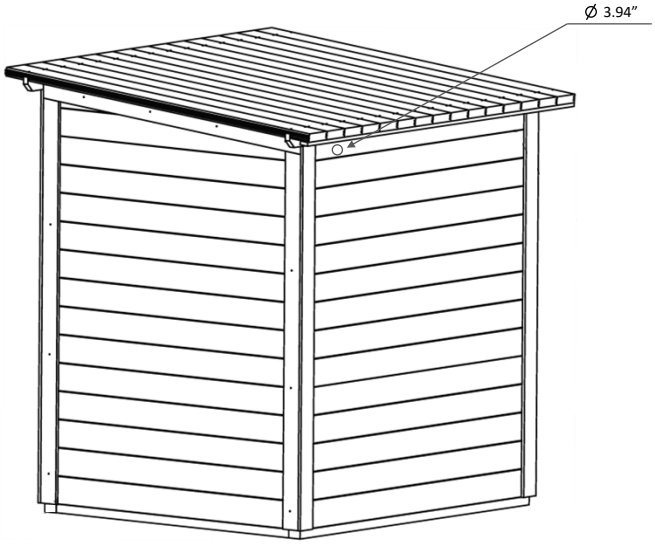

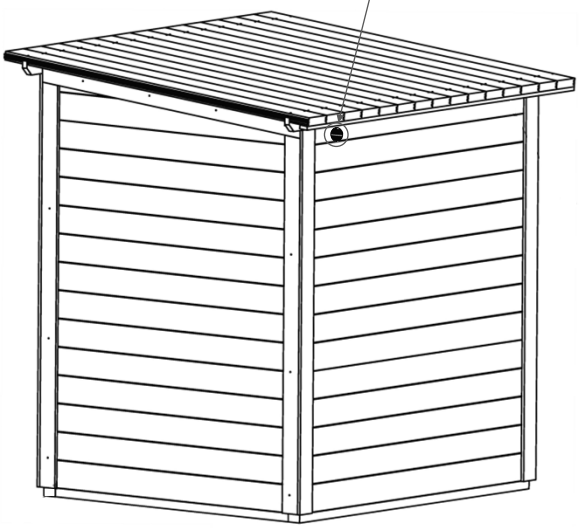

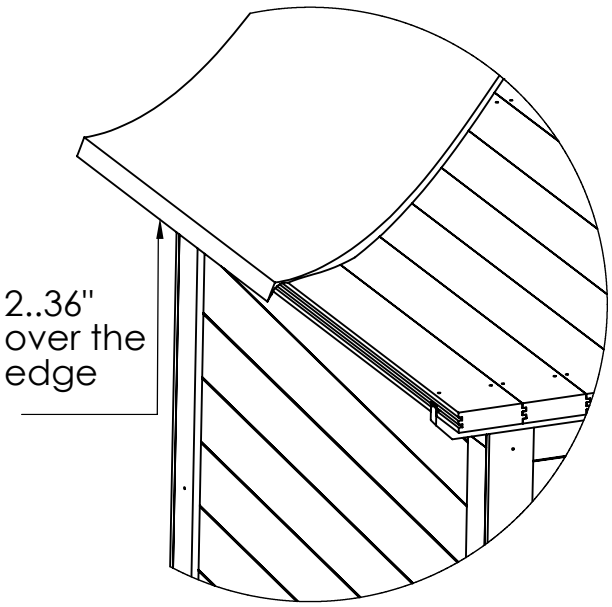
2..36"
over the
edge

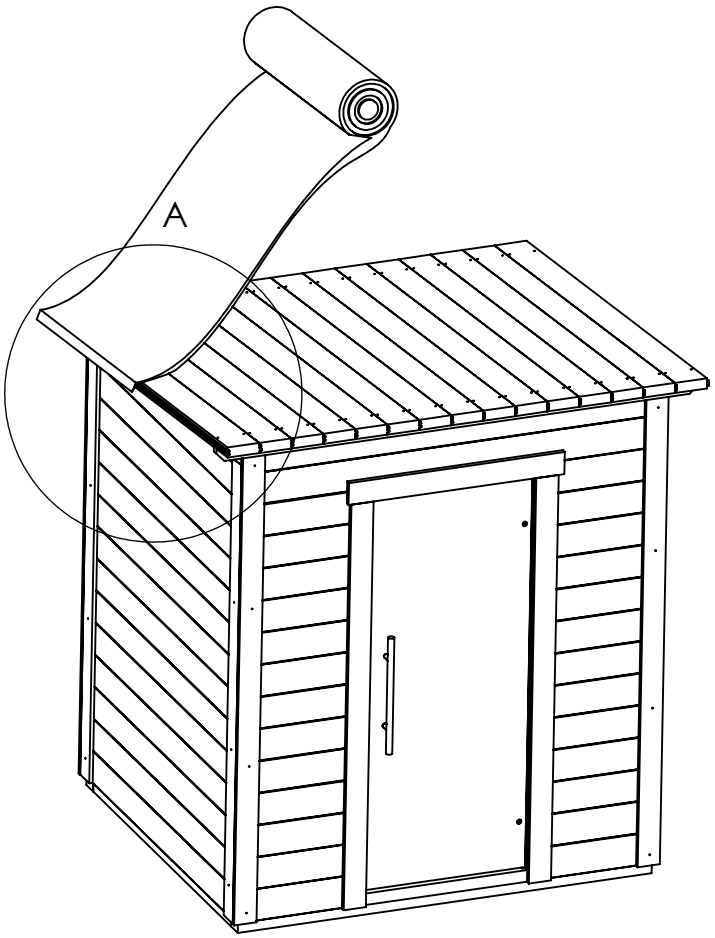
A

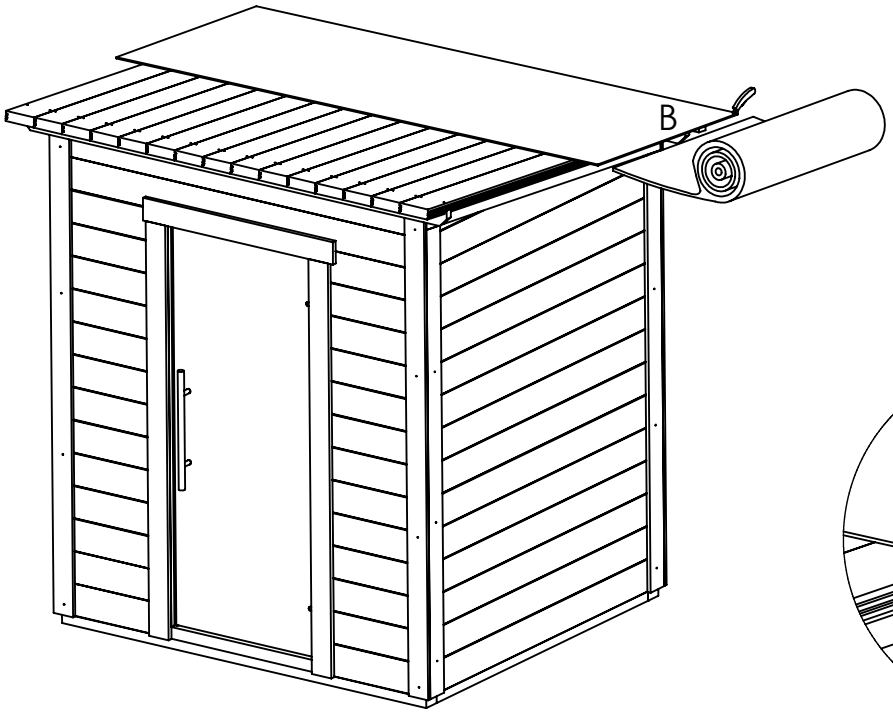
B

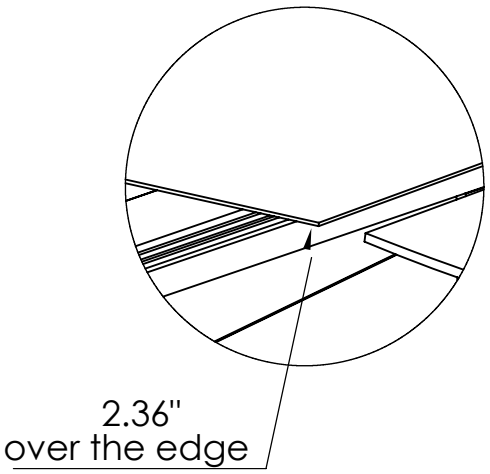
2.36"
over the edge

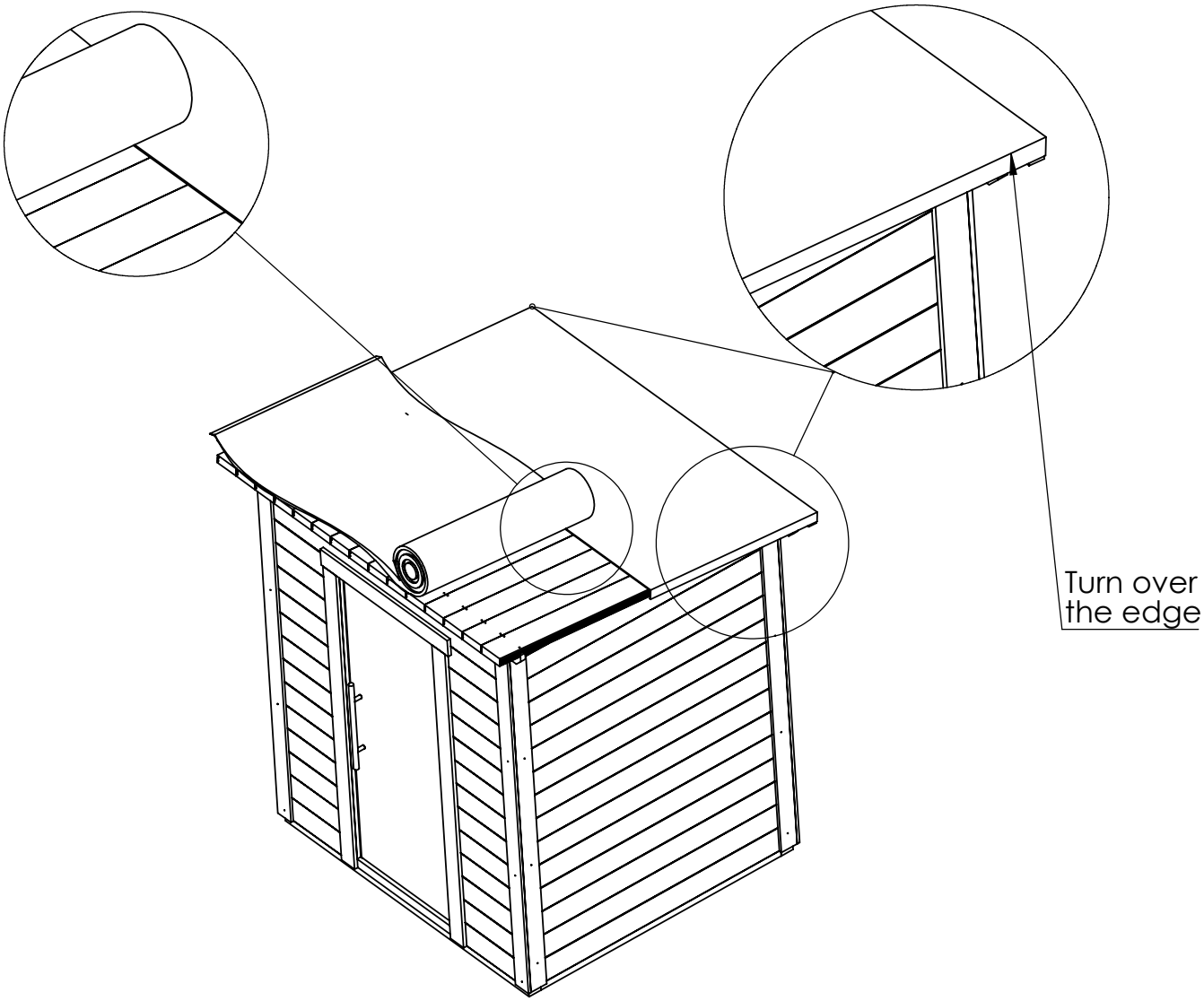
Turn over
the edge

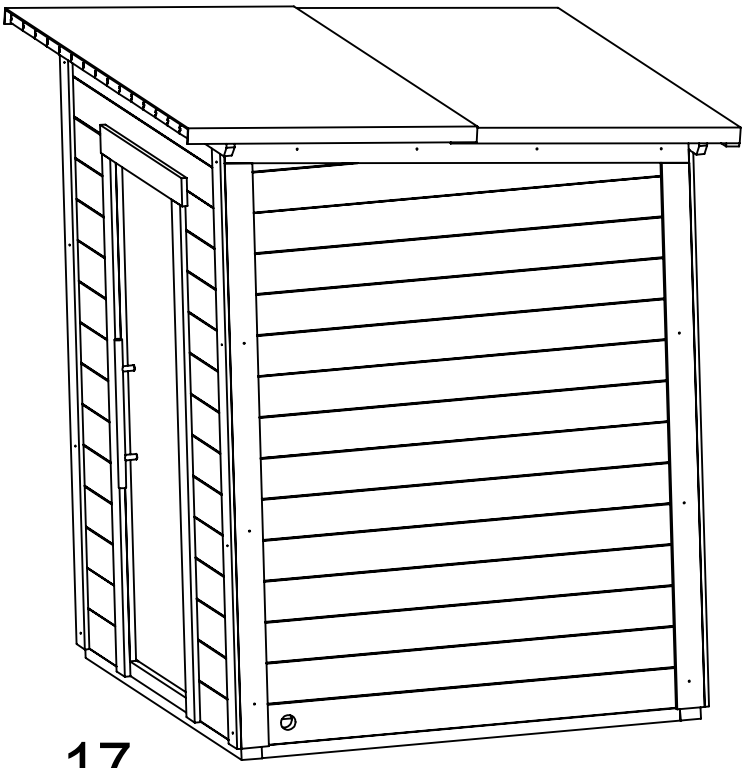

Vivida 400 Outdoor Sauna Room

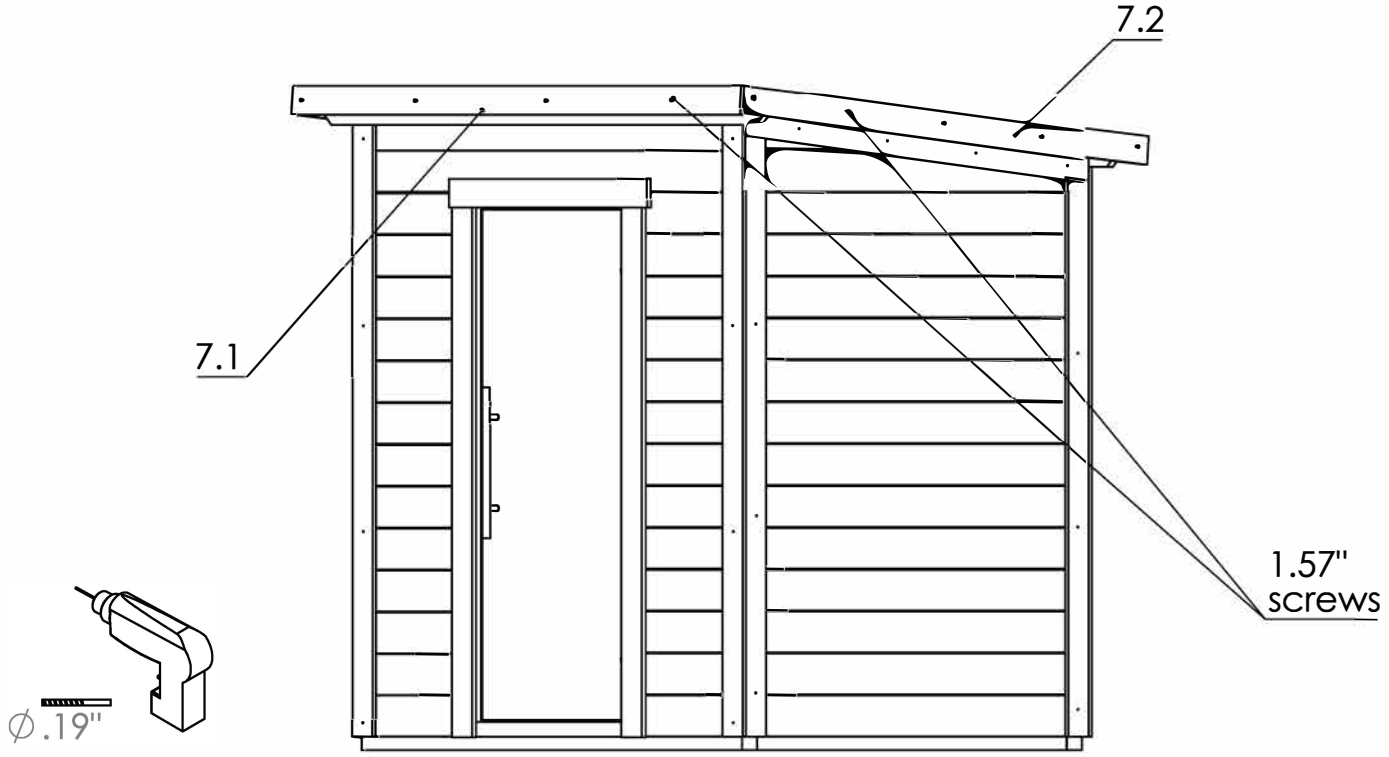

7.1	1
7.2	2
1.57" screws	15

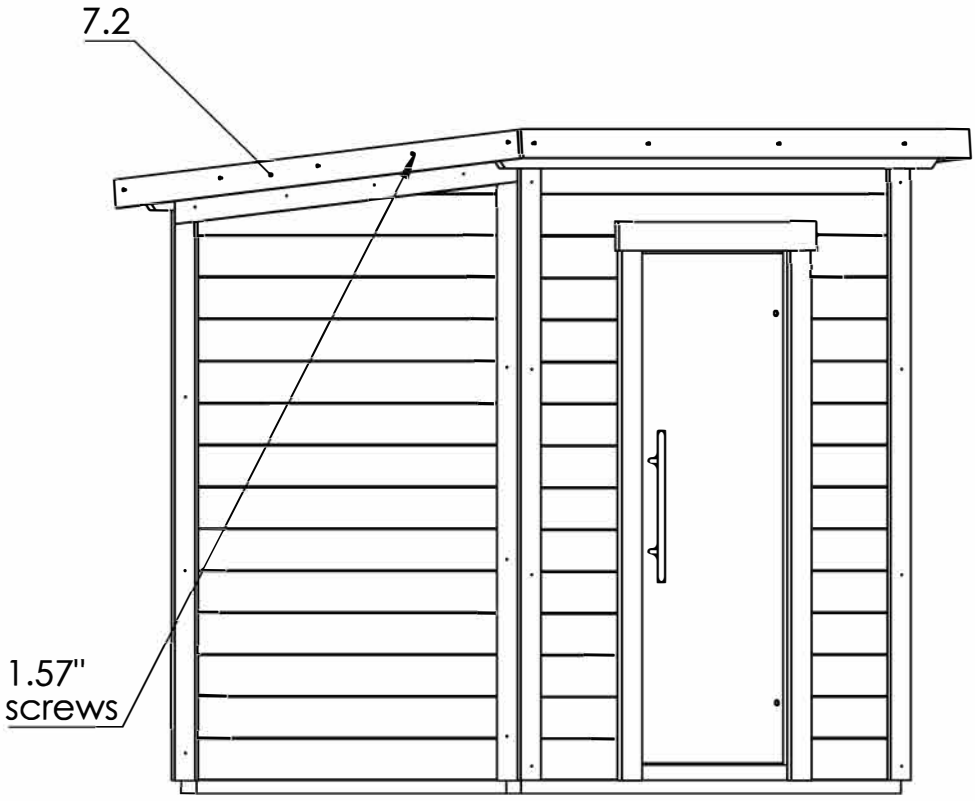

REV: 1.0_10/2024

FINSAUNA®

Sauna Care Guide

Surface preparation:

- Soil underneath the sauna should be removed and replaced with a well-drained and load-bearing material.
- It is important to ensure that the surface is load bearing. In addition, it is important to inhibit the growth of vegetation beneath and around the sauna to prevent damage from moisture.
- Bring the power cable to the sauna in accordance with the heater manufacturers' manual.

During sauna use:

- When using the heater and the control unit refer to the operation manual provided by the heater manufacturer.
- Throw water only on the stones and not on the walls or the platform.
- To keep the benches looking fresh, we advise using seating pads or a towel on the bench.
- Avoid sitting on benches in wet swimwear.
- Sauna stones will naturally erode over time. Replace old stones with new ones or add new stones.
- Avoid use of non-approved cleaning agents. For example, bleach on the wood surface will discolor it.

After sauna use:

- After using the sauna, ventilate the room well to allow the surfaces to dry.
- Wipe benches with a clean, damp cloth. Keep excess water from pooling on wood surfaces. Do not use a stream of water to wash the platforms.
- After cleaning the sauna, ventilate the room and allow surfaces to dry. Remove seating pads from the benches.
- When not using the sauna, the door should remain closed.

Annual maintenance:

- The wood in the sauna should be treated with an approved cleaning solution (sauna cleaner).
- Wash all surfaces exposed to wear with a specialized sauna cleaning solution (sauna cleaner), using a soft brush and/or cloth. Follow the directions of the cleaning solution manufacturer.
- For stronger stains and soiling, the platform surface can be cleaned gently using fine-grade sandpaper. The platform or sanded surface should then be re-treated with protectant.

Avoid the following:

- Drying textiles such as carpets and clothing etc. as this may pose a safety hazard. Excessive moisture may also damage the surface of the wood.
- Do not heat the sauna to a temperature beyond the specifications of the heater manufacturer. Excessive heat may cause the wood to warp or pose a safety hazard.
- Avoid pressure washing or using a stream of water to clean the sauna, as excess moisture may permanently damage the wood surface and structures.

FINSAUNA®

FINSAUNA SAUNA LIMITED WARRANTY
Finsauna extends this Limited Warranty solely to the original retail consumer purchaser of Finsauna products purchased from one of its authorized resellers.

LIMITED SAUNA WARRANTY
Finsauna warrants that its products shall be free from defects in workmanship under normal conditions of use and service for two years for residential applications after delivery to the original retail purchaser. This warranty is limited to making good any factory assembled component which in the judgment of Finsauna is deemed defective in workmanship. The warranty does not cover normal material wear, abuse, natural weathering of the lumber, or installation or delivery of components and applies only to the original retail purchaser.

WARRANTY PERFORMANCE
For any warranty service, Finsauna reserves the right to choose, at its option, repair of the problem or a replacement of the defective part. Finsauna reserves the right to substitute a part or component of equivalent value, either new or factory reconditioned, and any such repair or replacement shall assume as its warranty only the remaining portion of the warranty on the original product. In the event Finsauna chooses to repair any malfunction or defect covered by this warranty, a return authorization will be issued, and the component will be returned prepaid freight to Finsauna for repair of the defect. Finsauna will then ship the component back to the original retail purchaser upon completion of the repair. Prior to any return, contact Finsauna at: Finsauna, 511 Glenn Avenue, Wheeling, Illinois 60090, telephone number: (800) 957-2862, for packaging and shipping instructions and a return authorization number. In addition, Finsauna will require photographs of any defect and reserves the right to inspect or designate an agent to inspect any part that is claimed to be defective and covered by this warranty. Labor charges and related expenses for removal, installation, or replacement of the product or component are not covered under this warranty. Normal wear and tear, cosmetic issues or changes to individual pieces of lumber due to natural aging and weathering are not covered.

ACTS INVALIDATING WARRANTY
This warranty is void if the Finsauna product has been subject to alteration, misuse or abuse, commercial use, or if any repairs on the sauna are attempted by anyone other than an authorized representative of Finsauna. Alteration shall include, but is not limited to, deviation from the original assembly instructions, component change, or the addition of any non-approved device or heating system, which contributes to a component or unit failure, or unsafe operating system. Use of equipment in an application for which it is not designed will void this warranty. This includes, but is not limited to, damage caused by operation above safe operating temperatures, damage caused by added components, damage caused by harsh chemicals, damage caused by movement of the product, and damage caused by acts of God.

DISCLAIMERS

The Warranty does not cover naturally occurring and expected characteristics of wood materials (differences in wood grain, knots, slight variations in tone) and phenomena that occur naturally during use of the Product (shrinkage and expansion due to temperature and humidity, moderate deformation) and the visual disturbances they may cause, nor defects (including transport damage) that would have been detectable by visual inspection prior to installation of the Product. Except as expressly provided above, Finsauna makes no other representation or warranty, express or implied, either in fact or operation of law, statute, or otherwise, and Finsauna specifically disclaims any and all implied or statutory warranties, including warranties or merchantability and of fitness for a particular purpose. Finsauna shall not be liable for loss of use of the Finsauna product or other incidental or consequential costs, expenses, or damage, which may include but are not limited to, the removal of or reinstallation of a wall, deck or other fixture, water leakage, costs of shipping or packaging, applicable taxes, or the payment of any costs or expenses of disassembly, removal, or reinstallation of the product or any part. Your rights may vary from state to state. Under no circumstances shall Finsauna or its representatives be held liable for injury to any person or damage to any property, however arising, even if caused by the Finsauna Sauna or its representatives' negligence. No distributor, salesperson, dealer, retailer, or other representative of Finsauna has the authority to alter or change these warranties either orally or in writing.

FINSAUNA®

Finsauna is a Bathing Brands company © Bathing Brands, Inc 2024